HAYWARD®

COMPREHENSIVE ACTUATION GUIDE

Hayward Comprehensive Actuation Guide

define
design
deliver

20 QUALITY | SERVICE | INTEGRITY

WELCOME TO HAYWARD FLOW CONTROL

Hayward® Flow Control, a division of Hayward Industries, Inc., and based in Clemmons, NC, USA, has been a leading manufacturer of industrial thermoplastic valves and process control products for more than 60 years. In fact, Hayward was one of the originators of the first thermoplastic ball valves. Since then, we have remained committed to producing the highest quality products while providing outstanding service that exceeds customer expectations. Hayward has earned an unsurpassed reputation for product design, manufacturing precision, quality assurance, experience and know-how, and a total commitment to customer satisfaction and support. We serve a multitude of markets and industries worldwide with our products.

Founded in 1923 by Irving M. Hayward, Hayward Industries was a small company located in Brooklyn, NY, making specialty metal valves and industrial flow control products. When Mr. Hayward retired in 1964, new management acquired the company and a new period of growth and diversification began, one that continues to this day. Management realized an opportunity existed for thermoplastic, rather than metal, swimming pool filters and accessories, and diversified into the swimming pool market. Rapid growth in the pool business resulted in the creation of Hayward Pool Products, Inc. At the same time, through a combination of acquisitions, modernization of the manufacturing facilities and product innovations, the industrial thermoplastic flow control business grew as well—and became Hayward Flow Control.

RELIABLE BY DESIGN

Reliable by design, Hayward valves are designed using the latest state-of-the-art equipment. Our Computer Aided Design (CAD) system, linked to finite element software, provides accurate and essential stress analysis. Hayward valves are designed to be strong, with material where it counts allowing years of service. Hayward Flow Control products are backed up by our industry leading Three-Year Warranty.

WORLD CLASS QUALITY

As an ISO 9001:2015 certified company, Hayward Flow Control adheres to the strictest guidelines relative to component manufacture, assembly and testing. We employ the latest manufacturing technologies and continue to invest in new equipment and tooling. Our reputation for quality and reliability is unmatched. In addition to a tradition of quality and expertise, Hayward's highly qualified field sales organization also provides customer assistance, training and field support. We strive to provide our customers with products specific to their application criteria.

COMMITMENT TO THE FUTURE

Hayward remains dedicated to new product development and innovative process technology that produces high quality, reliable products and ultimately, total customer satisfaction. We will continue to advance fluid process technology as the leading American manufacturer of industrial thermoplastic flow control products.

CERTIFIED ISO 9001

HAYWARD GLOBAL WARRANTY 3 YEAR QUALITY ASSURED

BACKED BY HAYWARD FLOW CONTROL'S EXCLUSIVE THREE YEAR WARRANTY

C US

Table of Contents

HRS SERIES

HRS Series On/Off Proportional Electric Actuators Overview..... 4-5
HRSN2 Series On/Off Proportional Electric Actuators..... 7-8
HRSN2 Series Electronic Fail-Safe Actuators..... 9-10
HRCK2, HRCB2 Series Electric Actuator Local Control 11-12
HRSN3 Series On/Off Proportional Electric Actuators..... 13-14
HRSN3 Series Electronic Fail-Safe Actuator Battery Backup..... 15-16
HRCK3, HRCB3 Series Electric Actuator Local Control 17-18
HRCL3, HRCD3 Series Electric Actuator Local Control 19-20
HRSN4A~4D Series On/Off Proportional Electric Actuators..... 21-22
HRSN4A~4D Series Electronic Fail-Safe Actuator Battery Backup..... 23-24
HRCK4, HRCB4 Series Electric Actuator Local Control 25-26
HRCL4, HRCD4 Series Electric Actuator Local Control 27-28
HRSN4E & HRSN4F Series On/Off Proportional Electric Actuators 29-30
HRSN5 Series On/Off Proportional Electric Actuators..... 31-32
HRSN3 3-PHASE On/Off Proportional Electric Actuators 33
HRSN4 3-PHASE On/Off Proportional Electric Actuators 35
HRSN5 3-PHASE On/Off Proportional Electric Actuators 37
HRS Series Electronic Fail-Safe Battery Backup Transformer..... 39-40

COMPACT ELECTRIC ACTUATION

HZSN1 Series On/Off Proportional Electric Actuators..... 41-42
ECP Series Glass Filled Polypropylene Electric Actuators 43-44
EAU Series Electric Actuators..... 45-46
EAU1 Series Electric Actuators..... 47-48

PNEUMATIC ACTUATION AND CONTROLS

PMD Series Double Acting Pneumatic Actuators 49-50
PMS Series Spring Return Pneumatic Actuators..... 51-52
PMD4 Series Double Acting Pneumatic Actuators 53-54
PMS4 Series Spring Return Pneumatic Actuators..... 55-56
PMD6 Series Double Acting Pneumatic Actuators 57-58
PMS6 Series Spring Return Pneumatic Actuators..... 59-60
PCD Series Double Acting Pneumatic Actuators..... 61-62
PCS Series Spring Return Pneumatic Actuators 63-64
Pneumatic Actuation Overview..... 65-68

AUTOMATED PACKAGES

EA Series Automated True Union Ball Valves 69-70
EA1 Series Automated True Union Ball Valves 71-72
EAU Series Electric Actuators..... 73-74
EAU1 Series Electric Actuators..... 75-76
PM Series TBH Automated True Union Ball Valves 77-78
SV Series True Union Solenoid Valves 79-80
LHB Series Manual Limit Switch 81-82

HRS SERIES WIRING DIAGRAMS

HRSN2~4D
HRSN2 Wiring Diagrams..... 83-84
HRSN3A~4D Wiring Diagrams..... 85-86
3-PHASE
HRSN3A~4D BASIC 3-PHASE Wiring Diagrams.....87
HRSN3A~4D ON/OFF NON LCS 3-PHASE Wiring Diagrams.....87
HRSN3A~4D MOD NON LCS 3-PHASE Wiring Diagrams.....88
LOCAL CONTROL STATIONS
HRCK/CB2 Wiring Diagrams 89-90
HRCK/CB3A~4D Wiring Diagrams 91-92
HRCL/CD3A~4D Wiring Diagrams 94-95
LOCAL CONTROL STATIONS 3-PHASE
HRCK/CB3A~4D ON/OFF LCS Wiring Diagrams.....93
HRCK/CB3A~4D MOD LCS Wiring Diagrams.....93
HRCL/CD3A~4D ON/OFF LCS Wiring Diagrams.....96
HRCL/CD3A~4D MOD LCS Wiring Diagrams.....96
FAIL-SAFE BATTERY BACKUP
HRSN2 Fail-Safe Wiring Diagrams.....97
HRSN3A~4D Fail-Safe Wiring Diagrams.....98

TECHNICAL INFORMATION

Actuator Worksheet.....99
HRS Series Actuator Selector.....101
Compact & Thermoplastic Electric Actuator Selector 102
PC Series Pneumatic Double Acting Actuator Selector.....103
PC Series Pneumatic Air to Spring Fail-Safe Actuator Selector 104
PM Series Pneumatic Double Acting Actuator Selector.....105
PM Series Pneumatic Air to Spring Fail-Safe Actuator Selector.....106
Glossary of Actuation Terms..... 107-108
Warranty & RGA Policy.....109
Product Listings.....111

Disclaimer: Products and Dimensional data are subject to change without notice. Consult factory for possible updates.

HRS SERIES ELECTRIC ACTUATORS

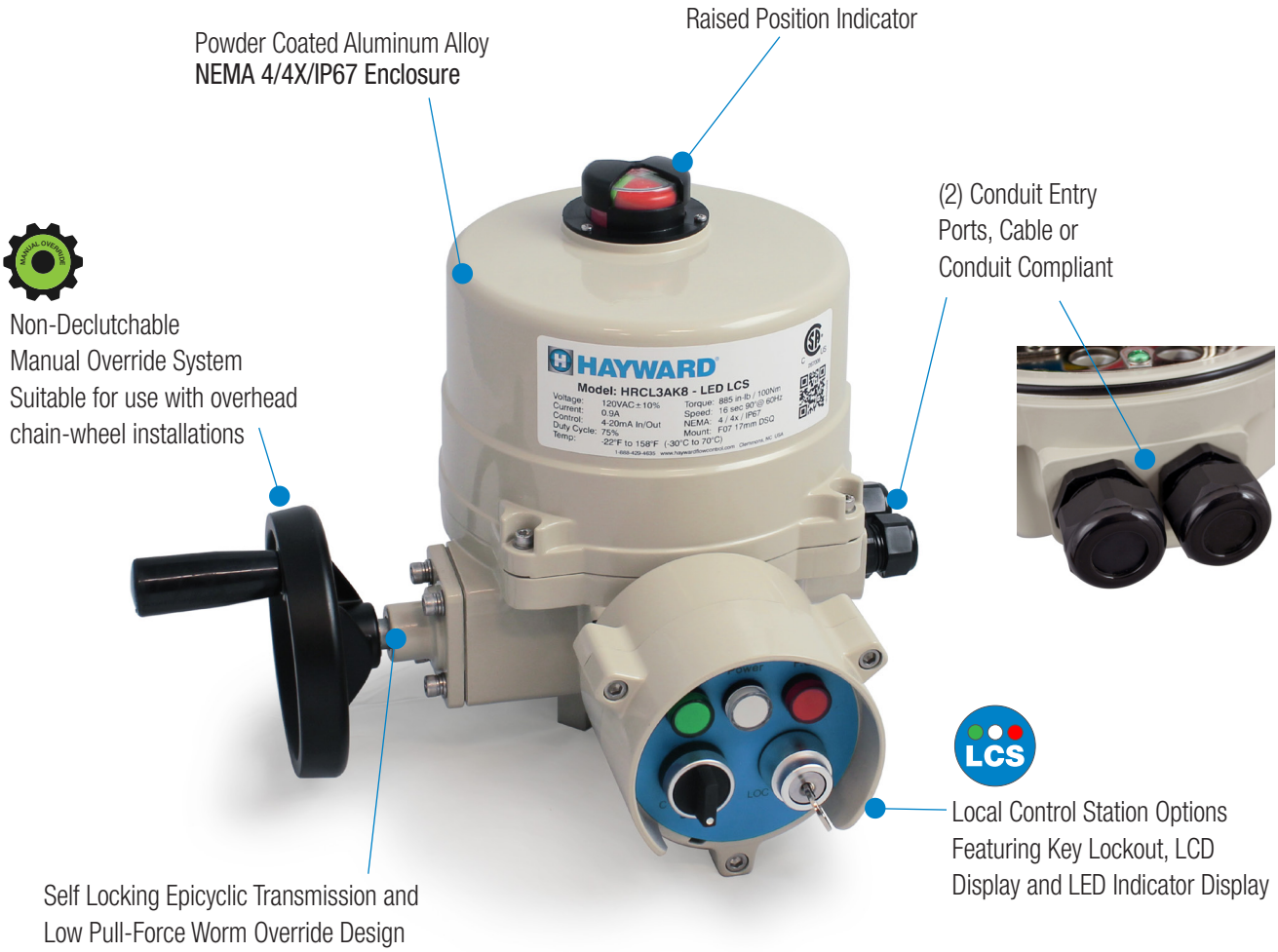

OVERVIEW

Hayward's HRS Series electric actuators are designed and produced to provide years of service in demanding industrial environments such as chemical processing, waste and water treatment, power generation, oil & gas, marine, mining and building services. These quarter-turn units drive dampers, ball valves, butterfly valves or inlet guide vanes that require torque ranges from 300 lbf-in up through 177,000 lbf-in. The HR Series housings are designed to meet NEMA 4X environmental demands, with ISO5211 compliant mounting that readily mounts up to most valves in the industries served. Featuring an epicyclic transmission system, the HR Series provides highly efficient multiplication of motor power to produce uniquely compact torque ranges compared to other technologies. A clutch-free manual override system provides full-time override capabilities during powered or un-powered events, and allows for simple adaptation for overhead chain-wheel drive installations.

UNDER THE HOOD

COLOR CODED CAM SYSTEM

Easily accessible travel and auxiliary switch cams are color coded to provide instant recognition of the CW or CCW cams when making stroke adjustments. Cam positions are easily changed by utilizing 2.5mm setscrews across the entire HRS range of actuators.

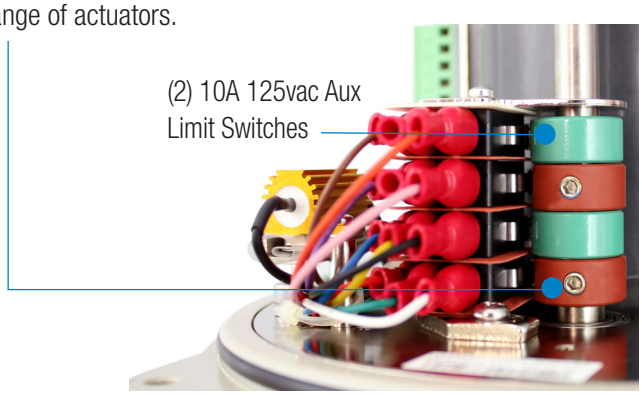

ISO VERSATILITY

Following ISO principle, the Hayward HRS Series line of actuation offers complete versatility with a wide range of ISO compliant flanges and interchangeable drive sockets.

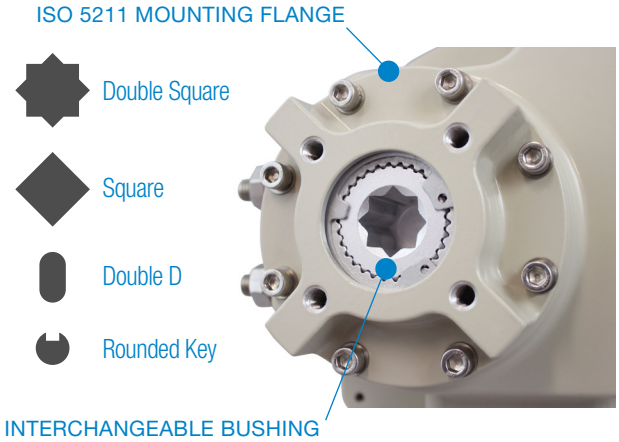

PLUG & PLAY WIRING

Clean, Easily Accessible Internal Wiring Layout, Removable Wire Receiver for Ease of Install

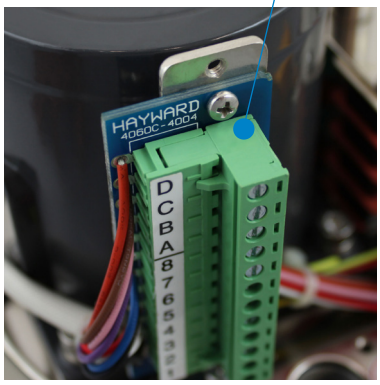

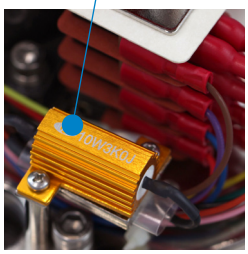

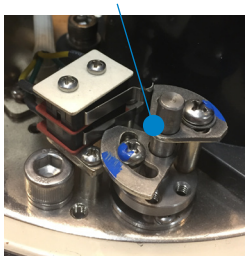

Pre Calibrated Torque Switch, Factory Set and not for field adjustment. Provides the utmost in over torque protection for the most sensitive of applications. All Torque forces are measured mechanically directly from the gear train.

DIGITAL/ANALOG TIMER KIT

The 7-day timer offers two channels with daily and weekly programming funtionality. High accuracy of timing, user-friendly interface and clear LCD display offers convenience and reliability for timing/scheduled applications.

Notes:

Hayward is a registered trademark
of Hayward Industries, Inc.
© 2020 Hayward Industries, Inc.

USA: 1.888.429.4635 • Fax: 1.888.778.8410 • One Hayward Industrial Drive • Clemmons, NC 27012 • Email: hfcsales@hayward.com
Canada: 1.888.238.7665 • Fax: 1.905.829.3636 • 2880 Plymouth Drive • Oakville, ON L6H 5R4 • Email: hflowcanada@hayward.com
Visit us at: haywardflowcontrol.com

HRSN2 Series On/Off & Proportional Electric Actuators

FOR BALL UP TO 6” AND BUTTERFLY VALVES UP TO 4”

KEY FEATURES

- Units are equipped with two (2) volt-free Form A Auxiliary switches
- ISO5211 compliant mounting with a double square female drive socket
- Raised visual position indicator
- NEMA 4X/IP67 compliant
- Two (2) EMT entry ports with sealed cable glands

OPTIONS

- Manual Override Handwheel
- Local Control Stations
- IP68 Submersion
- Battery Backup and Supercap Backup

TECHNICAL INFORMATION

ACTUATOR SPECIFICATIONS			HRSN2A	HRSN2B	HRSN2R	HRSN2S
Supply	Torque Output (**in-lb** / Nm)		**310** / 35	**310** / 35	**440** / 50	**440** / 50
12VAC* - 12VDC*	Current Draw (Start / Run / LRA)		3.5A / 2.0A / 3.8A	3.5A / 2.0A / 3.8A	3.5A / 2.0A / 3.8A	3.5A / 2.0A / 3.8A
	Speed (90°) DC-60Hz/50Hz, seconds		8 / 8	8 / 8	10 / 10	10 / 10
	Motor - 12V DC Perm Magnet 2 Pole Brush		6W	6W	6W	6W
	On/Off / **Proportional**	Duty Cycle (IEC60034)	75% (S2-15 min) / **75% (S4-75%)**			
		Motor Protection, Temp / Class	All - 130°C / Class B			
		Motor Starts, per hour, Max	All - 600			
24VAC - 24VDC	Current Draw (Start / Run / LRA)		2.1A / 1.2A / 2.3A	2.1A / 1.2A / 2.3A	2.1A / 1.2A / 2.3A	2.1A / 1.2A / 2.3A
	Speed (90°) DC-60Hz/50Hz, seconds		8 / 8	8 / 8	10 / 10	10 / 10
	Motor - 24V DC Perm Magnet 2 Pole Brush		6W	6W	6W	6W
	On/Off / **Proportional**	Duty Cycle (IEC60034)	75% (S2-15 min) / **75% (S4-75%)**			
		Motor Protection, Temp / Class	All - 130°C / Class B			
		Motor Starts, per hour, Max	All - 600			
120VAC	Current Draw (Start / Run / LRA)		0.4A / 0.4A / 0.5A	0.4A / 0.4A / 0.5A	0.4A / 0.4A / 0.5A	0.4A / 0.4A / 0.5A
	Speed (90°) 60Hz / 50Hz, seconds		9 / 11	9 / 11	13 / 15	13 / 15
	Motor - 120V Capacitor Run TENV		10W	10W	10W	10W
	On/Off - Std Duty / **On/Off - Ext Duty & Proportional**	Duty Cycle (IEC60034)	25% (S2-15 min) / **75% (S4-75%)**			
		Motor Protection, Temp / Class	155°C / Class F / **180°C / Class H**			
		Motor Starts, per hour, Max	600 / **1200**			
230VAC	Current Draw (Start / Run / LRA)		0.2A / 0.2A / 0.3A	0.2A / 0.2A / 0.3A	0.2A / 0.2A / 0.3A	0.2A / 0.2A / 0.3A
	Speed (90°) 60Hz / 50Hz, seconds		9 / 11	9 / 11	13 / 15	13 / 15
	Motor - 230V Capacitor Run TENV		10W	10W	10W	10W
	On/Off - Std Duty / **On/Off - Ext Duty & Proportional**	Duty Cycle (IEC60034)	25% (S2-15 min) / **75% (S4-75%)**			
		Motor Protection, Temp / Class	155°C / Class F / **180°C / Class H**			
		Motor Starts, per hour, Max	600 / **1200**			
All	Manual Override		Bottom 8mm Hex Shaft	Hand Wheel	Bottom 8mm Hex Shaft	Hand Wheel
	Environmental Rating		NEMA 4/4X & IP67			
	Electrical Entry (2)		1/2” EMT or Polyamide gland			
	Control		On/Off, Proportional, 2 Pos RO, RC & 3 Position			
	Auxiliary Switch - End of Travel		(2) Form A Volt-Free, Rated 3A @ 250vac			
	Ambient Operating Range		-22°F to +158°F (-30°C to +70°C)			
	Humidity Range		0-95% RH			
	Altitude Limit		9850 ft / 3000 m			

HRSN2 Series
On/Off & Proportional Electric Actuators

FOR BALL UP TO 6” AND BUTTERFLY VALVES UP TO 4"

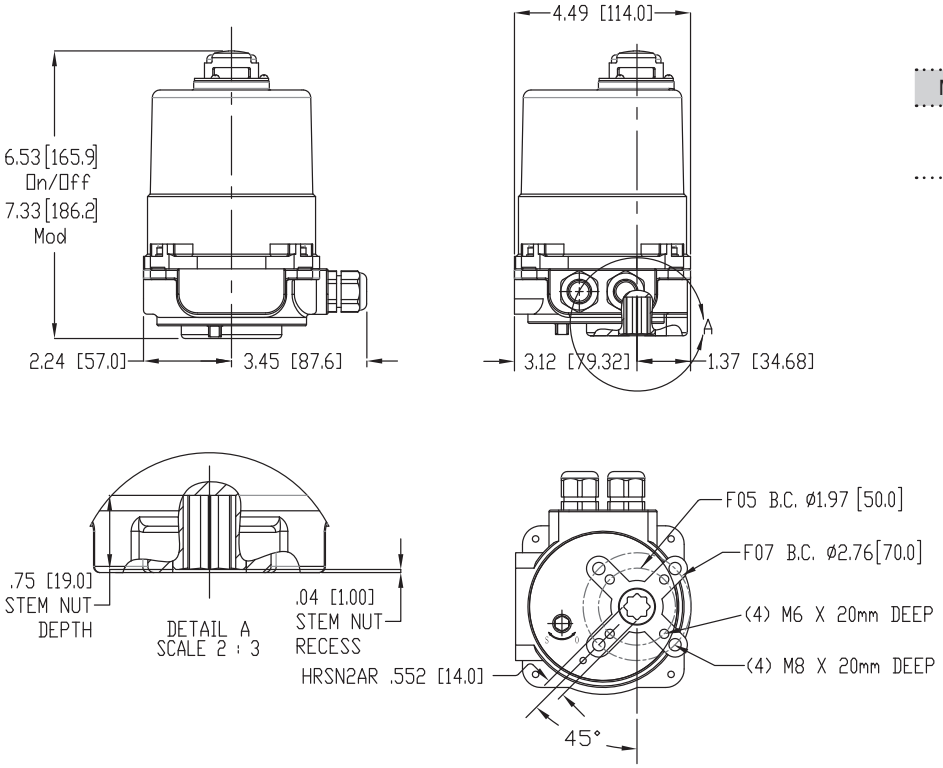

	COVER REMOVAL CLEARANCE		WEIGHT
MODEL	TYPE	IN/MM	LBS/KG
HRSN2A	on/off - All	4.93 / 125	6.6 / 3.0
	Mod - LV / HV		8.8 / 4.0
HRSN2R	on/off - All	4.93 / 125	6.6 / 3.0
	Mod - LV / HV		8.8 / 4.0

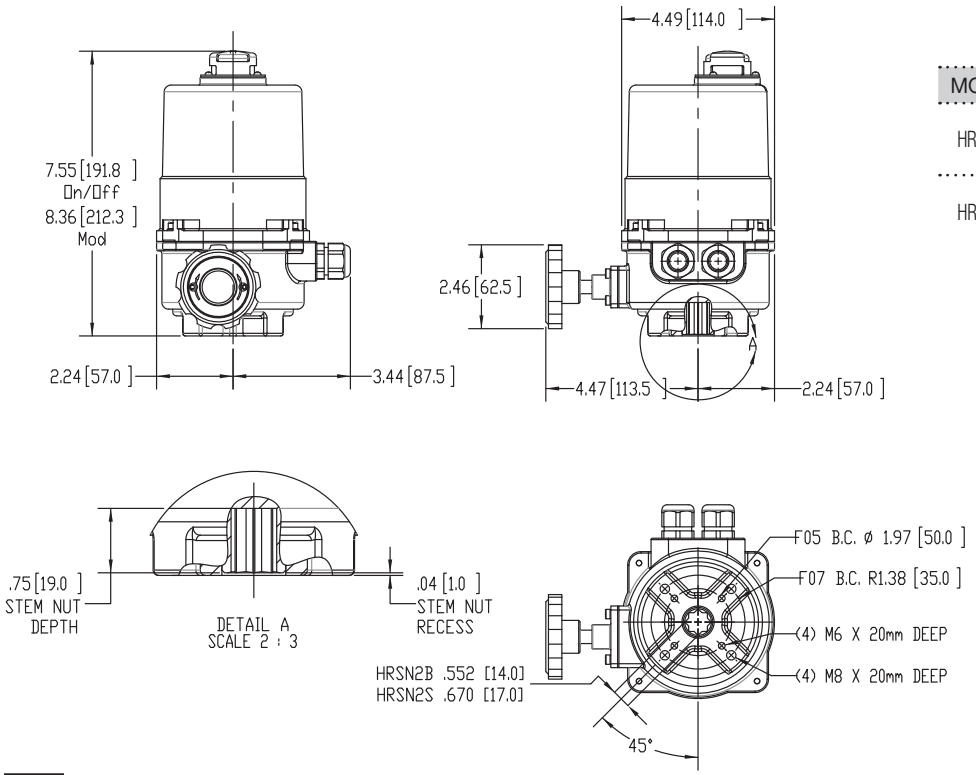

	COVER REMOVAL CLEARANCE		WEIGHT
MODEL	TYPE	IN/MM	LBS/KG
HRSN2B	on/off - All	4.93 / 125	7.0 / 3.2
	Mod - LV / HV		9.3 / 4.2
HRSN2S	on/off - All	4.93 / 125	7.0 / 3.2
	Mod - LV / HV		9.3 / 4.2

Hayward is a registered trademark
of Hayward Industries, Inc.
© 2020 Hayward Industries, Inc.

USA: 1.888.429.4635 • Fax: 1.888.778.8410 • One Hayward Industrial Drive • Clemmons, NC 27012 • Email: hfcsales@hayward.com
Canada: 1.888.238.7665 • Fax: 1.905.829.3636 • 2880 Plymouth Drive • Oakville, ON L6H 5R4 • Email: hflowcanada@hayward.com
Visit us at: haywardflowcontrol.com

HRSN2 Series Electronic Fail-Safe Actuators Battery/Supercapacitor Backup

FOR BALL UP TO 6” AND
BUTTERFLY VALVES UP TO 4”

SAFE

KEY FEATURES

- 24VAC/VDC operation standard, with 120vac and 230vac transformer options available
- Up to 440”lbs torque for ball valves up to 6” and butterfly valves up to 4”
- Field selectable fail CW or CCW operation for complete flexibility
- Self-Contained charge and discharge control of the reserve bank provides maximum life from the reserve energy system
- Status indicators show reserve health
- Reserve bank is field replaceable to minimize down-time
- Reserve System Fault-Out contact is standard and allows remote monitoring of reserve system performance.
- Two (2) 1/2” EMT ports for ease of field wiring
- NEMA 4/4x/IP67 Compliant
- ISO5211 Mechanical mount w/ double-square female drive socket

HRS Series Electronic Fail-Safe Actuators are intended to provide positive positioning in power-fail conditions.

TECHNICAL INFORMATION

ACTUATOR SPECIFICATIONS			HRSN2A..2X/3X	HRSN2B..20/30	HRSN2R..2X/3X	HRSN2S..20/30
Supply	Torque Output (**in-lb** / Nm)		**310** / 35	**310** / 35	**440** / 50	**440** / 50
24VAC ~ 24VDC	Current Draw (Start/Run/LRA)		2.1A / 1.2A / 2.3A	2.1A / 1.2A / 2.3A	2.1A / 1.2A / 2.3A	2.1A / 1.2A / 2.3A
	Speed (90°) DC-60Hz/50Hz, seconds		8 / 8	8 / 8	10 / 10	10 / 10
	Motor - 24V DC Perm Magnet 2 Pole Brush		6W	6W	6W	6W
	On/Off / **Proportional**	Duty Cycle (IEC60034)	75% (S2-15 min) / **75% (S4-75%)**			
		Motor Protection, Temp / Class	All - 130°C / Class B			
		Motor Starts, per hour, Max	All - 600			
120VAC	Requires 120:24 Transformer Pack, 100VA		HRSBBC120-100	HRSBBC120-100	HRSBBC120-100	HRSBBC120-100
230VAC	Requires 230:24 Transformer Pack, 100VA		HRSBBC230-100	HRSBBC230-100	HRSBBC230-100	HRSBBC230-100
All	Manual Override		Bottom 8mm Hex Shaft	Hand Wheel	Bottom 8mm Hex Shaft	Hand Wheel
	Environmental Rating		NEMA 4/4X & IP67			
	Electrical Entry (2)		1/2” EMT or Polyamide gland			
	Control		On/Off, Proportional			
	Auxiliary Switch - End of Travel		(2) Form A Volt-Free, Rated 3A @ 250vac			
	Ambient Operating Range		-22°F to +158°F / -30°C to +70°C			
	Humidity Range		0-95% RH			
	Altitude Limit		9850 ft / 3000 m			
	RESERVE SPECIFICATIONS		HRSN2A~HRSN2S			
	Type - Battery		22.2V Lithium-Ion pack with charge / discharge control (20 Series)			
	Type - Supercapacitor		28V 60F Supercapacitor Bank with Charge/Discharge Control (30 Series)			

HRSN2 Series
Electronic File-Safe Actuators
Battery Backup

FOR BALL UP TO 6” AND BUTTERFLY VALVES UP TO 4"

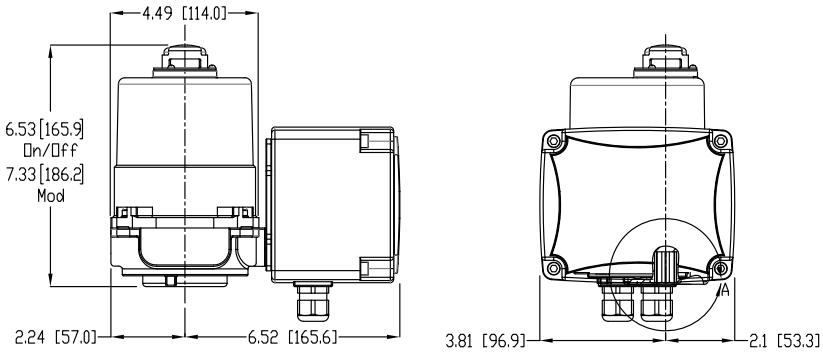

COVER REMOVAL CLEARANCE			WEIGHT
MODEL	TYPE	IN/MM	LBS/KG
HRSN2A	on/off - All	4.93 / 125	12.1 / 5.5
	Mod - LV / HV		14.3 / 6.5
HRSN2R	on/off - All	4.93 / 125	12.1 / 5.5
	Mod - LV / HV		14.3 / 6.5

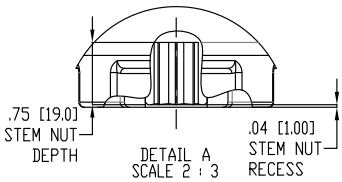

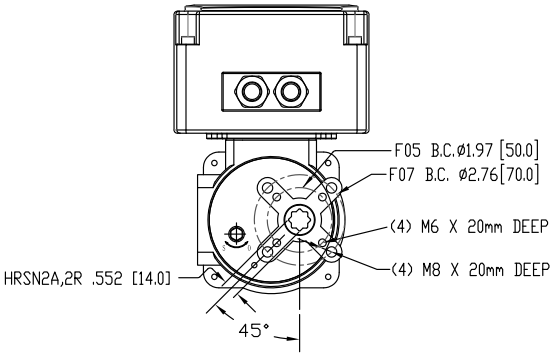

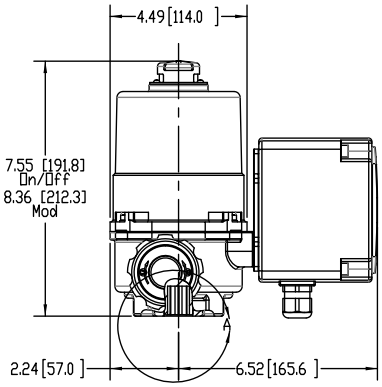

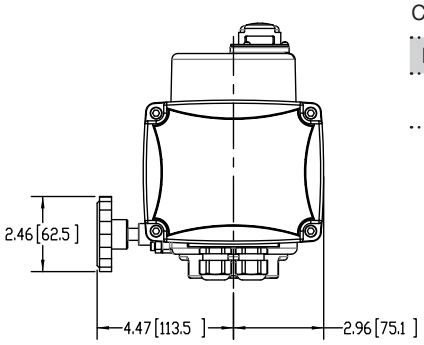

COVER REMOVAL CLEARANCE			WEIGHT
MODEL	TYPE	IN/MM	LBS/KG
HRSN2B	on/off - All	4.93 / 125	12.5 / 5.7
	Mod - LV / HV		14.7 / 6.7
HRSN2S	on/off - All	4.93 / 125	12.5 / 5.7
	Mod - LV / HV		14.7 / 6.7

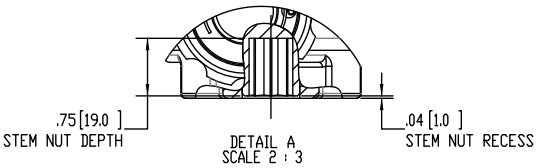

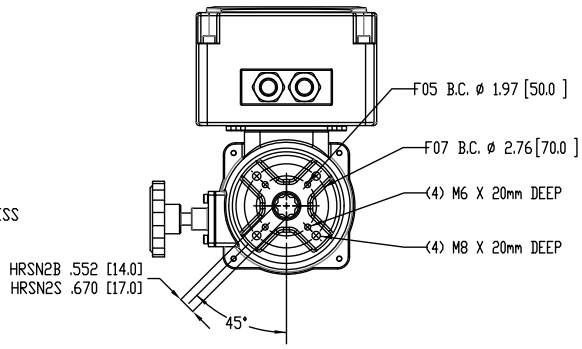

Hayward is a registered trademark
of Hayward Industries, Inc.
© 2020 Hayward Industries, Inc.

USA: 1.888.429.4635 • Fax: 1.888.778.8410 • One Hayward Industrial Drive • Clemmons, NC 27012 • Email: hfcsales@hayward.com
Canada: 1.888.238.7665 • Fax: 1.905.829.3636 • 2880 Plymouth Drive • Oakville, ON L6H 5R4 • Email: hflowcanada@hayward.com
Visit us at: haywardflowcontrol.com

HRCK2, HRCB2 Series Electric Actuator Local Control

FOR BALL UP TO 6” AND
BUTTERFLY VALVES UP TO 4”

TYPE CK

TYPE CB

KEY FEATURES

- Local Control Stations allow stand-alone or isolated operation from PLC systems
- CK Type has Knob/Key Type Switches
- CB Type has Knob/Knob Type Switches
- Up to 440”lbs torque for ball valves up to 6” and butterfly valves up to 4”
- 120VAC operation standard, with 24VAC/VDC, 230VAC options available
- Units equipped with two (2) volt-free Form A Auxiliary switches
- Anti-Condensate heater standard
- ISO5211 compliant mechanical mount w/ double-square female drive socket
- One (1) 1/2” EMT port for ease of field wiring
- NEMA 4/4x/IP67 Compliant (CB Type)
- NEMA 4/4x/IP65 Compliant (CK Type)
- Raised visual position indicator in high contrast red/green color

TECHNICAL INFORMATION

	ACTUATOR SPECIFICATIONS	HRCK2A, HRCB2A	HRCK2B, HRCB2B	HRCK2R, HRCB2R	HRCK2S, HRCB2S
Supply	Torque Output (**lbf-in** / Nm)	**310** / 35	**310** / 35	**440** / 50	**440** / 50
24VAC - 24VDC	Current Draw (Start / Run / LRA)	2.1A / 1.2A / 2.3A	2.1A / 1.2A / 2.3A	2.1A / 1.2A / 2.3A	2.1A / 1.2A / 2.3A
	Speed (90°) DC, seconds	8	8	10	10
	Motor - 24vdc Perm Magnet Brush Type	6W	6W	6W	6W
120V	Current Draw (Start / Run / LRA)	.39A / .36A / .48A	.39A / .36A / .48A	.39A / .36A / .48A	.39A / .36A / .48A
	Speed (90°) 60Hz / 50Hz, seconds	9.2 / 11	9.2 / 11	12.5 / 15	12.5 / 15
	Motor - 120vac Split-Phase Cap TENV	10W	10W	10W	10W
230V	Current Draw (Start / Run / LRA)	.23A / .21A / .28A	.23A / .21A / .28A	.23A / .21A / .28A	.23A / .21A / .28A
	Speed (90°) 60Hz / 50Hz, seconds	9.2 / 11	9.2 / 11	12.5 / 15	12.5 / 15
	Motor - 120vac Split-Phase Cap TENV	10W	10W	10W	10W
All	Manual Override	Bottom 8mm Hex Shaft	Hand Wheel	Bottom 8mm Hex Shaft	Hand Wheel
	Ambient Operating Range	-22°F to +158°F (-30°C to +70°C)			
	LOCAL CONTROL STATION	HRCK2A~2S, HRCB2A~2S			
	Type	CK Type has Knob/Key Type Switches, CB Type has Knob/Knob Type Switches			

HRCK2, HRCB2 Series
Electric Actuator with Local Control

FOR BALL UP TO 6” AND BUTTERFLY VALVES UP TO 4"

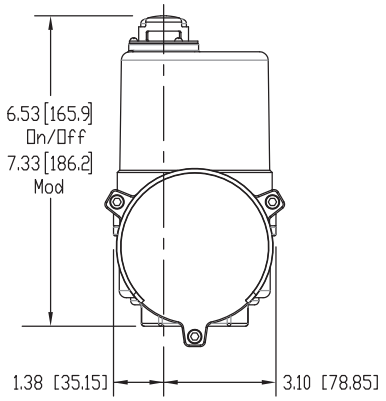

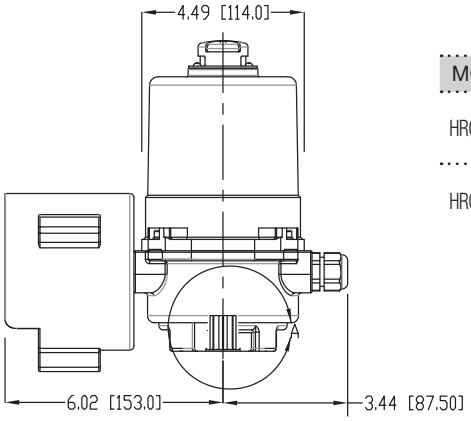

MODEL	TYPE	COVER REMOVAL CLEARANCE IN/MM	WEIGHT LBS/KG
HRCKCB2A	on/off - All	4.93 / 125	13.2 / 6
	Mod - LV / HV		15.4 / 7
HRCKCB2R	on/off - All	4.93 / 125	13.2 / 6
	Mod - LV / HV		15.4 / 7

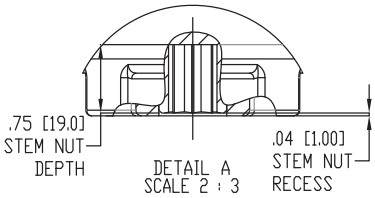

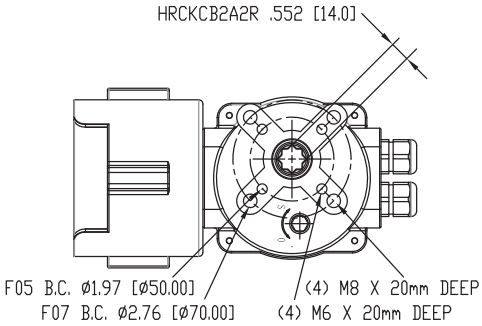

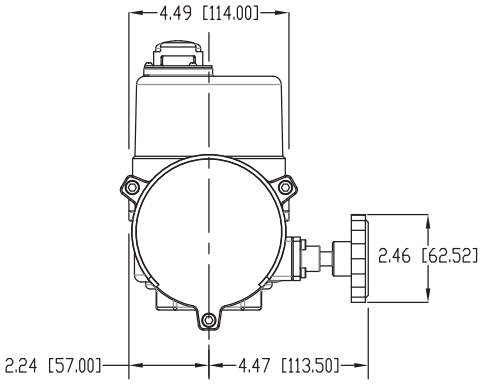

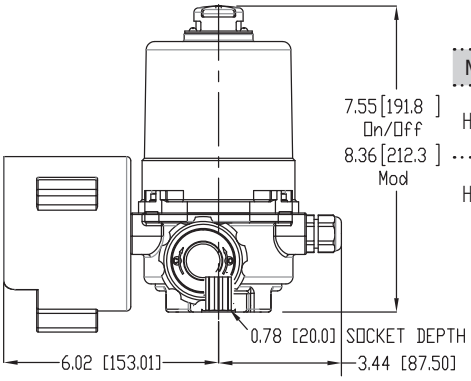

MODEL	TYPE	COVER REMOVAL CLEARANCE IN/MM	WEIGHT LBS/KG
HRCKCB2B	on/off - All	4.93 / 125	13.6 / 6.2
	Mod - LV / HV		15.8 / 7.2
HRCKCB2S	on/off - All	4.93 / 125	13.6 / 6.2
	Mod - HV		15.8 / 7.2

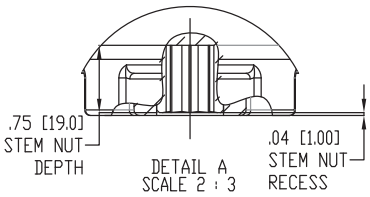

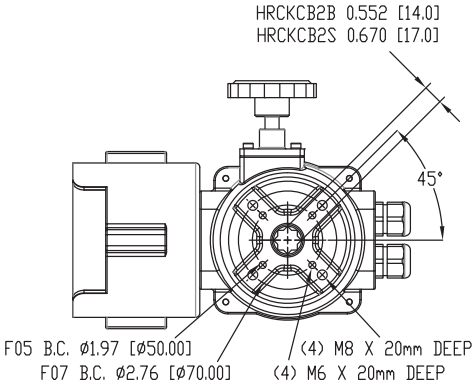

Hayward is a registered trademark of Hayward Industries, Inc.
© 2020 Hayward Industries, Inc.

USA: 1.888.429.4635 • Fax: 1.888.778.8410 • One Hayward Industrial Drive • Clemmons, NC 27012 • Email: hfcsales@hayward.com
Canada: 1.888.238.7665 • Fax: 1.905.829.3636 • 2880 Plymouth Drive • Oakville, ON L6H 5R4 • Email: hflowcanada@hayward.com
Visit us at: haywardflowcontrol.com

HRSN3 Series On/Off & Proportional Electric Actuators

FOR BALL AND BUTTERFLY VALVES UP TO 8”

KEY FEATURES

- Units are equipped with two (2) volt-free Form A Auxiliary switches
- ISO5211 compliant mounting with removable double square female drives and inserts
- 120VAC operation standard with 24VAC/VDC, 230VAC & 3 Phase options available
- Raised visual position indicator
- NEMA 4X/IP67 compliant
- Two (2) EMT entry ports with sealed cable glands

OPTIONS

- Local Control Stations
- IP68 Submersion
- Battery Backup
- Interchangeable ISO5211 Flange & Drives
- Torque Switches

TECHNICAL INFORMATION

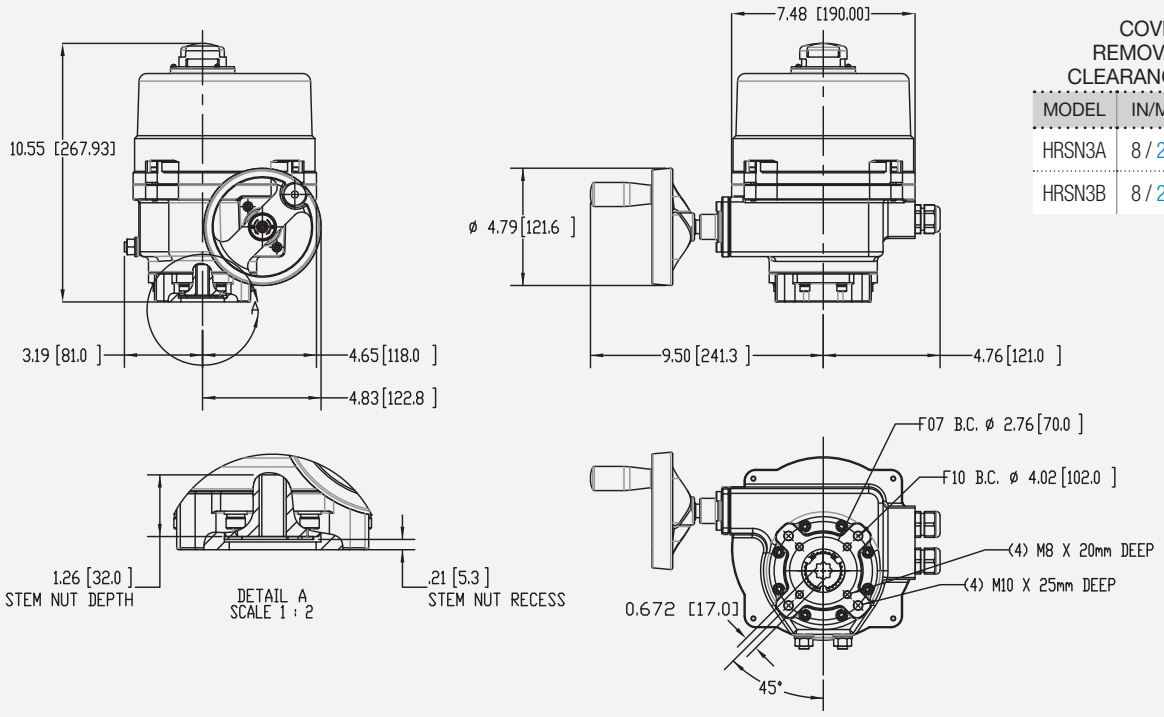

COVER REMOVAL CLEARANCE		WEIGHT
MODEL	IN/MM	LBS/KG
HRSN3A	8 / 200	28.6 / 13
HRSN3B	8 / 200	28.6 / 13

HRSN3 Series
On/Off & Proportional Electric Actuators

FOR BALL AND BUTTERFLY VALVES UP TO 8"

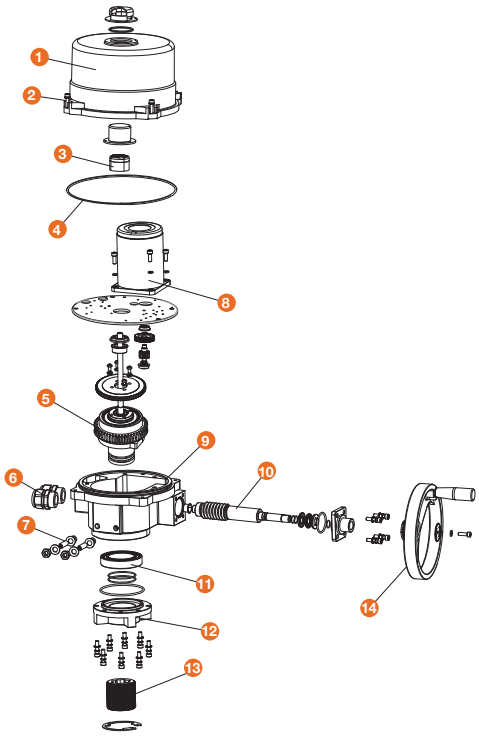

PARTS LIST

1. Cast Aluminum Cover
2. Captured Cover Screws
3. High Visibility Position Indicator
4. Cover O-Ring Seal
5. Epicyclic Transmission Set
6. EMT Glands
7. External Mechanical Stops
8. Drive Motor
9. Cast Aluminum Housing
10. Worm Override Shaft
11. Heavy Final Drive Bearing
12. ISO5211 Flange
13. Splined Drive Insert
14. Handwheel w/Collapsible Knob

ACTUATOR SPECIFICATIONS			HRSN3A	HRSN3B
Supply	Torque Output (**in-lb** / Nm)		**880/100**	**1770/200**
12VAC* - 12VDC*	Current Draw (Start / Run / LRA)		7.2A / 5.2A / 17.8A	7.2A / 5.2A / 17.8A
	Speed (90°) DC-60Hz/50Hz, seconds		14 / 14	28 / 28
	Motor - 12V DC Perm Magnet 2 Pole Brush		25W	25W
	On/Off / **Proportional**	Duty Cycle (IEC60034)	75% (S2-15 min) / **75% (S4-75%)**	
		Motor Protection, Temp / Class	All - 130°C / Class B	
		Motor Starts, per hour, Max	All - 600	
24VAC - 24VDC	Current Draw (Start / Run / LRA)		4.2A / 3.2A / 11.0A	4.2A / 3.2A / 11.0A
	Speed (90°) DC-60Hz/50Hz, seconds		14 / 14	28 / 28
	Motor - 24V DC Perm Magnet 2 Pole Brush		25W	25W
	On/Off / **Proportional**	Duty Cycle (IEC60034)	75% (S2-15 min) / **75% (S4-75%)**	
		Motor Protection, Temp / Class	All - 130°C / Class B	
		Motor Starts, per hour, Max	All - 600	
120VAC	Current Draw (Start / Run / LRA)		1.2A / 0.9A / 1.5A	1.2A / 0.9A / 1.5A
	Speed (90°) 60Hz / 50Hz, seconds		16 / 19	33 / 39
	Motor - 120V Capacitor Run TENV		40W	40W
	On/Off - Std Duty / **On/Off - Ext Duty & Proportional**	Duty Cycle (IEC60034)	25% (S2-15 min) / **75% (S4-75%)**	
		Motor Protection, Temp / Class	155°C / Class F / **180°C / Class H**	
		Motor Starts, per hour, Max	600 / **1200**	
230VAC	Current Draw (Start / Run / LRA)		0.5A / 0.4A / 0.7A	0.5A / 0.4A / 0.7A
	Speed (90°) 60Hz / 50Hz, seconds		16 / 19	33 / 39
	Motor - 230V Capacitor Run TENV		40W	40W
	On/Off - Std Duty / **On/Off - Ext Duty & Proportional**	Duty Cycle (IEC60034)	25% (S2-15 min) / **75% (S4-75%)**	
		Motor Protection, Temp / Class	155°C / Class F / **180°C / Class H**	
		Motor Starts, per hour, Max	600 / **1200**	
All	Environmental Rating		NEMA 4/4X & IP67	
	Electrical Entry (2)		3/4" EMT or Polyamide gland	
	Control		On/Off, Proportional, 2 Pos RO, RC & 3 Position	
	Auxiliary Switch - End of Travel		(2) Form A Volt-Free, Rated 10A @ 250vac	
	Ambient Operating Range		-22°F to +158°F (-30°C to +70°C)	
	Humidity Range		0-95% RH	
	Altitude Limit		9850 ft / 3000 m	

Hayward is a registered trademark of Hayward Industries, Inc.
© 2020 Hayward Industries, Inc.

USA: 1.888.429.4635 • Fax: 1.888.778.8410 • One Hayward Industrial Drive • Clemmons, NC 27012 • Email: hfcsales@hayward.com
Canada: 1.888.238.7665 • Fax: 1.905.829.3636 • 2880 Plymouth Drive • Oakville, ON L6H 5R4 • Email: hflowcanada@hayward.com
Visit us at: haywardflowcontrol.com

HRSN3 Series Electronic Fail-Safe Actuator Battery Backup

SAFE

KEY FEATURES

- Stored Energy System provides positive valve positioning upon loss of mains power
- Up to 1770"lbs torque for ball valves and butterfly valves up to 8"
- 24VAC/VDC operation standard, with 120vac and 230vac transformer options available
- Field selectable fail CW or CCW operation for complete flexibility
- Self-Contained charge and discharge control of the Lithium-Ion Battery provides maximum life from the reserve energy system
- Battery Pack is field replaceable to minimize down-time
- Stored Energy status indicators show system health
- Fault-Out contact is standard and allows remote monitoring of the stored energy system performance.
- ISO5211 Mechanical mount with removable double-square female drive socket
- Two (2) 3/4" EMT ports for ease of field wiring
- NEMA 4/4x/IP67 Compliant
- Optional Torque Switches

HRS Series Electronic Fail-Safe Actuators are intended to provide positive positioning in power-fail conditions.

TECHNICAL INFORMATION

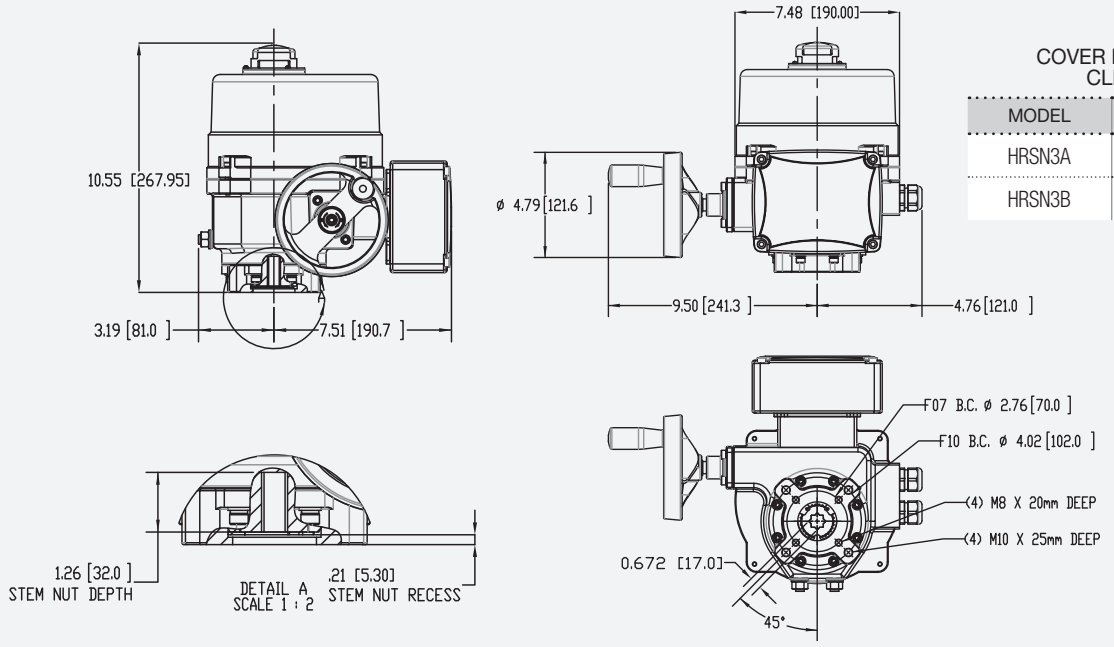

	COVER REMOVAL CLEARANCE	WEIGHT
MODEL	IN/MM	LBS/KG
HRSN3A	8 / 200	34.1 / 15.5
HRSN3B	8 / 200	34.1 / 15.5

HRSN3 Series
Electronic Fail-Safe Actuator Battery Backup

FOR BALL AND BUTTERFLY VALVES UP TO 8"

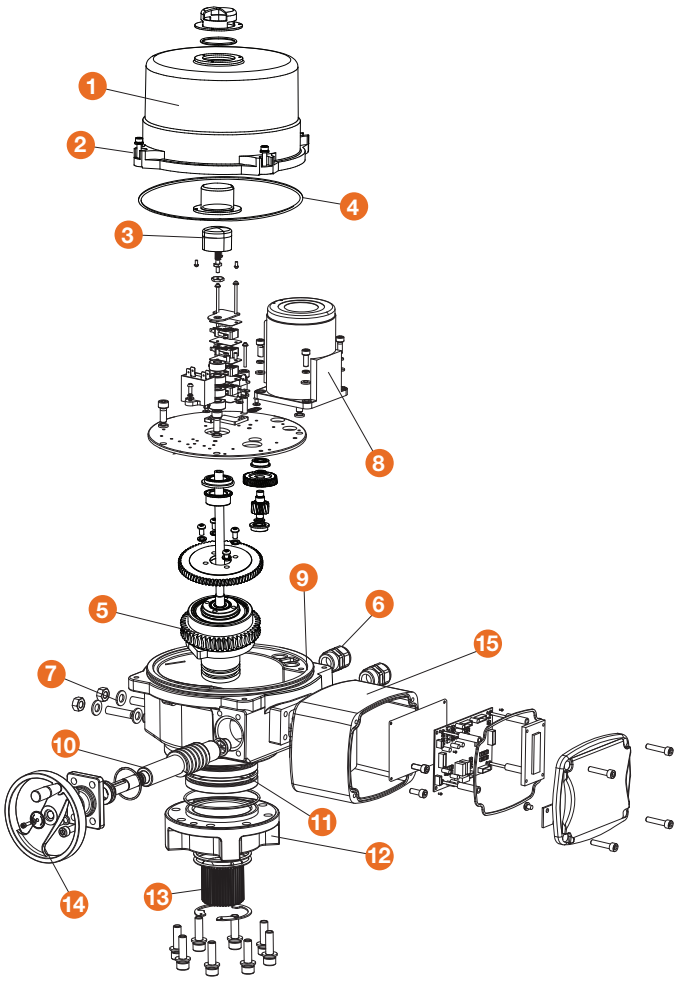

PARTS LIST

1. Cast Aluminum Cover
2. Captured Cover Screws
3. High Visibility Position Indicator
4. Cover O-Ring Seal
5. Epicyclic Transmission Set
6. EMT Glands
7. External Mechanical Stops
8. Drive Motor
9. Cast Aluminum Housing
10. Worm Override Shaft
11. Heavy Final Drive Bearing
12. ISO5211 Flange
13. Splined Drive Insert
14. Handwheel w/Collapsible Knob
15. Cast Aluminium Control Housing

ACTUATOR SPECIFICATIONS			HRSN3A..20	HRSN3B..20
Supply	Torque Output (**in-lbs** / Nm)		**880** / 100	**1770** / 200
24VAC ~ 24VDC	Current Draw (Start / Run / LRA)		4.2A / 3.2A / 11.0A	4.2A / 3.2A / 11.0A
	Speed (90°) DC-60Hz/50Hz, seconds		14 / 14	28 / 28
	Motor - 24V DC Perm Magnet 2 Pole Brush		25W	25W
	On/Off / **Proportional**	Duty Cycle (IEC60034)	75% (S2-15 min) / **75% (S4-75%)**	
		Motor Protection, Temp / Class	All - 130°C / Class B	
		Motor Starts, per hour, Max	All - 600	
120VAC	Requires 120:24 Transformer Pack, 250VA		OEMBBC120-250	OEMBBC120-250
230VAC	Requires 230:24 Transformer Pack, 250VA		OEMBBC230-250	OEMBBC230-250
All	Manual Override		Clutchless Handwheel	Clutchless Handwheel
	Environmental Rating		NEMA 4/4X & IP67	
	Electrical Entry (2)		3/4" EMT or Polyamide gland	
	Control		On/Off, Proportional	
	Auxiliary Switch - End of Travel		(2) Form A Volt-Free, Rated 10A @ 250vac	
	Ambient Operating Range		-22°F to +158°F / -30°C to +70°C	
	Humidity Range		0-95% RH	
	Altitude Limit		9850 ft / 3000 m	
	BATTERY SPECIFICATIONS		HRSN3A~3B (20 SERIES)	
	Type		22.2V Lithium-Ion pack with charge / discharge control	

Hayward is a registered trademark
of Hayward Industries, Inc.
© 2020 Hayward Industries, Inc.

USA: 1.888.429.4635 • Fax: 1.888.778.8410 • One Hayward Industrial Drive • Clemmons, NC 27012 • Email: hfcsales@hayward.com
Canada: 1.888.238.7665 • Fax: 1.905.829.3636 • 2880 Plymouth Drive • Oakville, ON L6H 5R4 • Email: hflowcanada@hayward.com
Visit us at: haywardflowcontrol.com

HRCK3, HRCB3 Series Electric Actuator Local Control

TYPE CK

TYPE CB

KEY FEATURES

- Local Control Stations allow stand-alone or isolated operation from PLC systems
- CK Type has Knob/Key Type Switches
- CB Type has Dual Knob Type Switches
- Available from 880"lbs to 1770"lbs
- 120VAC operation standard, with 24VAC/VDC, 230VAC and 3 Phase options available
- Units equipped with two (2) volt-free Form A Auxiliary switches
- Anti-Condensate heater standard
- ISO5211 compliant mechanical mount with removable double-square female drive socket
- Two (2) 3/4" EMT ports for ease of field wiring
- NEMA 4/4x/IP67 Compliant (CB Type)
- NEMA 4/4x/IP65 Compliant (CK Type)
- Raised visual position indicator in high contrast red/green color
- Clutchless Hand Wheel override standard
- Collapsible spinner handle
- Optional Torque Switches

TECHNICAL INFORMATION

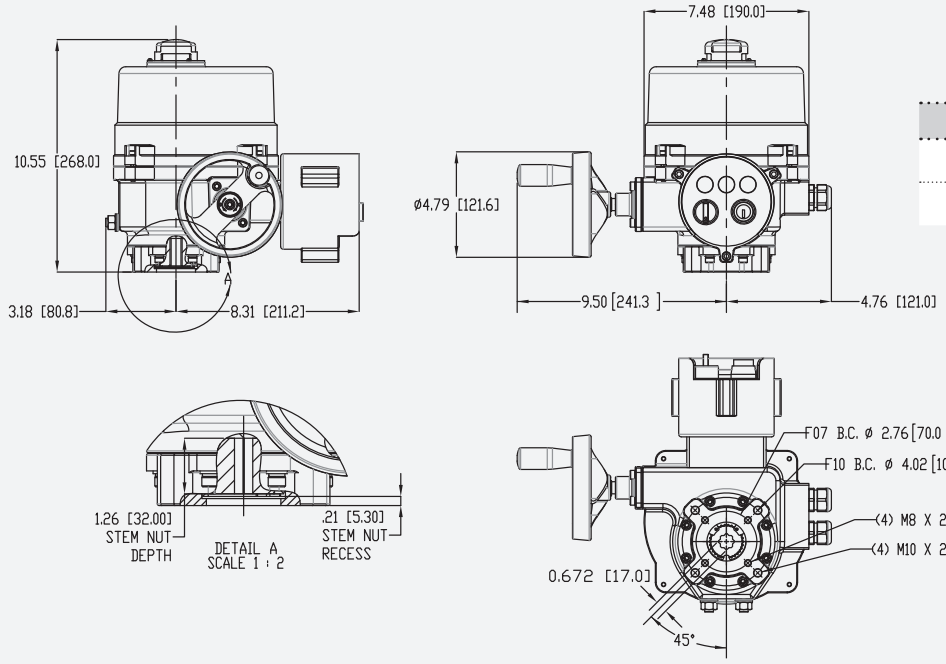

	COVER REMOVAL CLEARANCE	WEIGHT
MODEL	IN/MM	LBS/KG
HRCKCB3A	8 / 200	35.2 / 16
HRCKCB3B	8 / 200	35.2 / 16

HRCK3, HRCB3 Series
Electric Actuator with Local Control Station

FOR BALL AND BUTTERFLY VALVES UP TO 8"

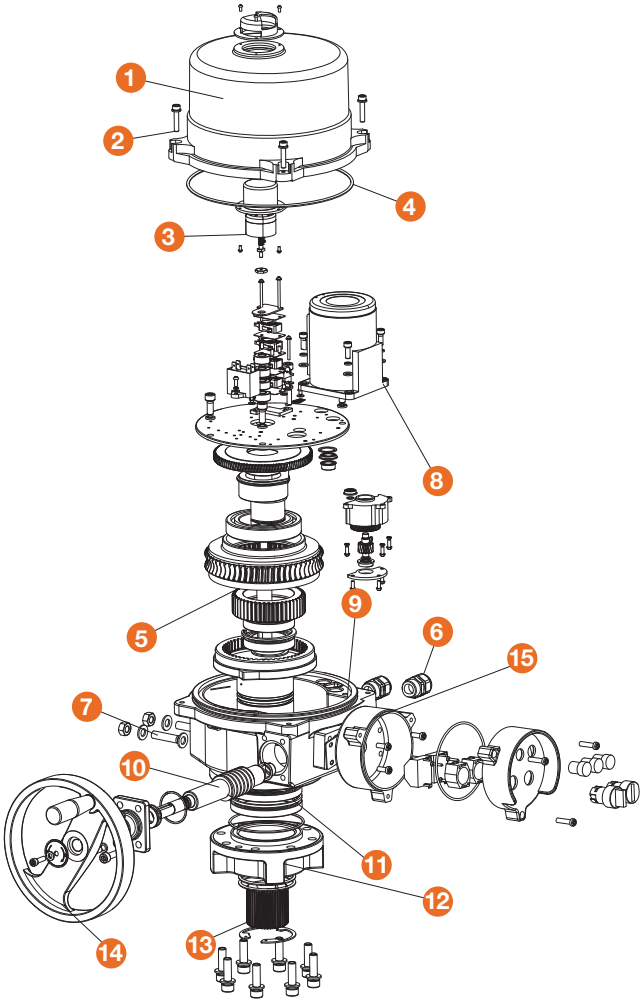

PARTS LIST

1. Cast Aluminum Cover
2. Captured Cover Screws
3. High Visibility Position Indicator
4. Cover O-Ring Seal
5. Epicyclic Transmission Set
6. EMT Glands
7. External Mechanical Stops
8. Drive Motor
9. Cast Aluminum Housing
10. Worm Override Shaft
11. Heavy Final Drive Bearing
12. ISO5211 Flange
13. Splined Drive Insert
14. Handwheel w/Collapsible Knob
15. Cast Aluminium Control Housing

	ACTUATOR SPECIFICATIONS	HRCK3A, HRCB3A	HRCK3B, HRCB3B
Supply	Torque Output (**lbf-in** / Nm)	**880** / 100	**1770** / 200
24VAC - 24VDC	Current Draw (Start / Run / LRA)	4.2A / 3.2A / 11A	4.2A / 3.2A / 11A
	Speed (90°) DC, seconds	14	28
	Motor - 24vdc Perm Magnet Brush Type	25W	25W
120V	Current Draw (Start / Run / LRA)	1.16A / 0.93A / 1.47A	1.16A / 0.93A / 1.47A
	Speed (90°) 60Hz / 50Hz, seconds	16 / 19	33 / 39
	Motor - 120vac Split-Phase Cap TENV	40W	40W
230V	Current Draw (Start / Run / LRA)	0.54A / 0.42A / 0.66A	0.54A / 0.42A / 0.66A
	Speed (90°) 60Hz / 50Hz, seconds	16 / 19	33 / 39
	Motor - 230vac Split-Phase Cap TENV	40W	40W
All	Electrical Entry (2)	3/4" EMT or ABS gland	
	Control	On/Off or Proportional	
	Ambient Operating Range	-22°F to +158°F / -30°C to +70°C	
	LOCAL CONTROL STATION	HRCK3A~3B, HRCB3A~3B	
	Type	CK Type has Knob/Key Type Switches / CB Type has Knob Type Switches	

Hayward is a registered trademark
of Hayward Industries, Inc.
© 2020 Hayward Industries, Inc.

USA: 1.888.429.4635 • Fax: 1.888.778.8410 • One Hayward Industrial Drive • Clemmons, NC 27012 • Email: hfcsales@hayward.com
Canada: 1.888.238.7665 • Fax: 1.905.829.3636 • 2880 Plymouth Drive • Oakville, ON L6H 5R4 • Email: hflowcanada@hayward.com
Visit us at: haywardflowcontrol.com

HRCL3, HRCD3 Series Electric Actuator Local Control

TYPE CL

TYPE CD

KEY FEATURES

- Local Control Stations allow stand-alone or isolated operation from PLC systems
- CL Type has LED Indicators
- CD Type has Full LCD Display
- Available from 880"lbs to 1770"lbs
- 120VAC operation standard, with 24VAC/VDC, 230VAC and 3 Phase options available
- Units equipped with two (2) volt-free Form A Auxiliary switches
- Anti-Condensate heater standard
- ISO5211 compliant mechanical mount with removable double-square female drive socket
- Two (2) 3/4" EMT ports for ease of field wiring
- NEMA 4/4x/IP67 Compliant
- Raised visual position indicator in high contrast red/green color
- Clutchless Hand Wheel override standard
- Collapsible spinner handle
- Optional Torque Switches

TECHNICAL INFORMATION

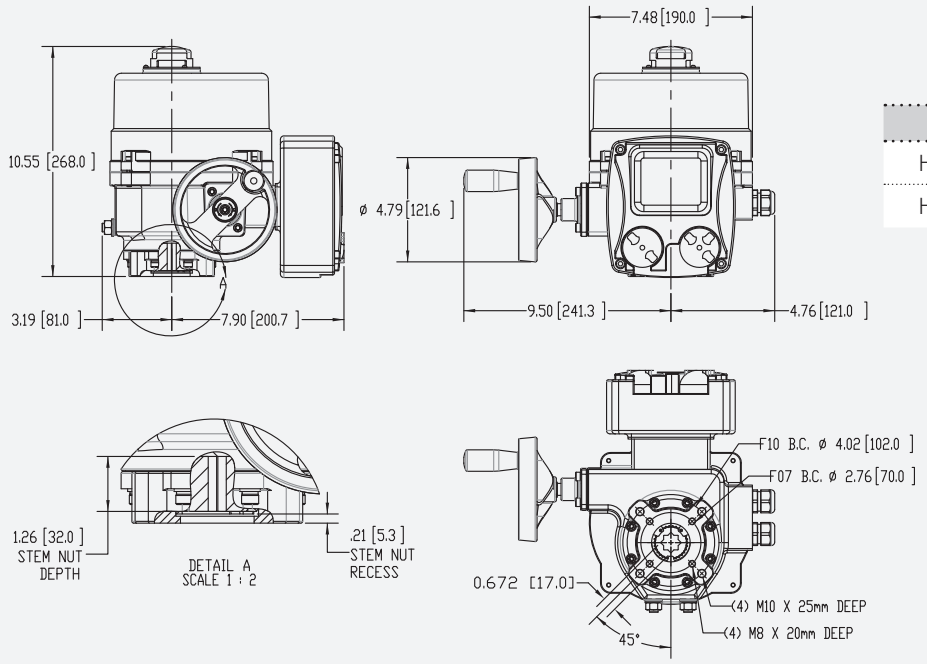

	COVER REMOVAL CLEARANCE	WEIGHT
MODEL	IN/MM	LBS/KG
HRCLCD3A	8 / 200	37.4 / 17
HRCLCD3B	8 / 200	37.4 / 17

HRCL3, HRCD3 Series
Electric Actuator with Local Control Station

FOR BALL AND BUTTERFLY VALVES UP TO 8"

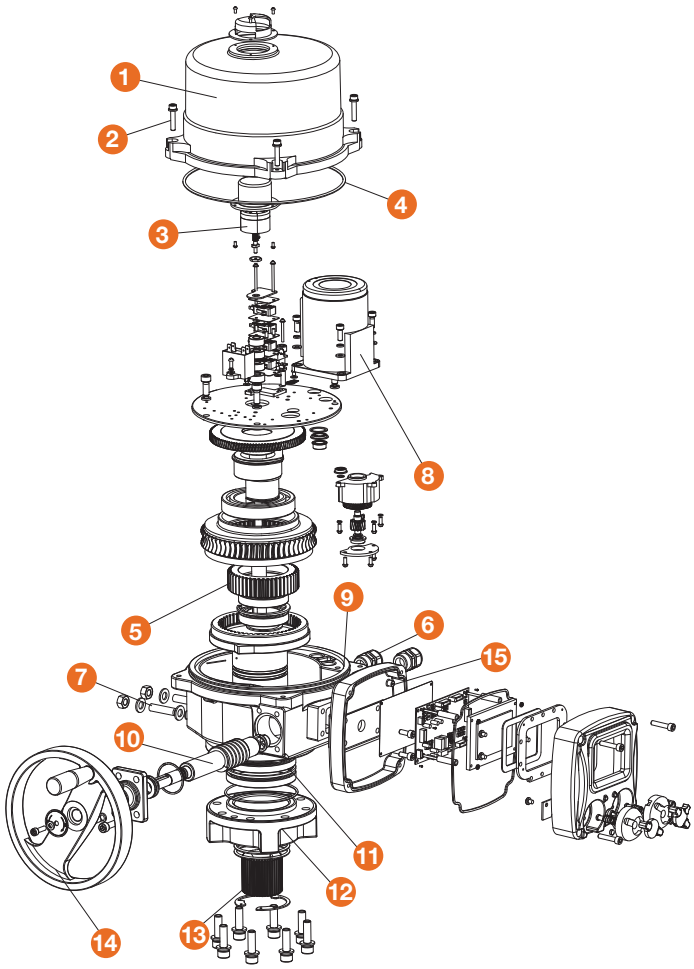

PARTS LIST

1. Cast Aluminum Cover
2. Captured Cover Screws
3. High Visibility Position Indicator
4. Cover O-Ring Seal
5. Epicyclic Transmission Set
6. EMT Glands
7. External Mechanical Stops
8. Drive Motor
9. Cast Aluminum Housing
10. Worm Override Shaft
11. Heavy Final Drive Bearing
12. ISO5211 Flange
13. Splined Drive Insert
14. Handwheel w/Collapsible Knob
15. Cast Aluminium Control Housing

	ACTUATOR SPECIFICATIONS	HRCL3A, HRCD3A	HRCL3B, HRCD3B
Supply	Torque Output (**lbf-in** / Nm)	**880** / 100	**1770** / 200
24VAC - 24VDC	Current Draw (Start / Run / LRA)	4.2A / 3.2A / 11A	4.2A / 3.2A / 11A
	Speed (90°) DC, seconds	14	28
	Motor - 24vdc Perm Magnet Brush Type	25W	25W
120V	Current Draw (Start / Run / LRA)	1.16A / 0.93A / 1.47A	1.16A / 0.93A / 1.47A
	Speed (90°) 60Hz / 50Hz, seconds	16 / 19	33 / 39
	Motor - 120vac Split-Phase Cap TENV	40W	40W
230V	Current Draw (Start / Run / LRA)	0.54A / 0.42A / 0.66A	0.54A / 0.42A / 0.66A
	Speed (90°) 60Hz / 50Hz, seconds	16 / 19	33 / 39
	Motor - 230vac Split-Phase Cap TENV	40W	40W
All	Electrical Entry (2)	3/4" EMT or ABS gland	
	Control	On/Off or Proportional	
	Ambient Operating Range	-22°F to +158°F / -30°C to +70°C	
	LOCAL CONTROL STATION	HRCL3A~3B, HRCD3A~3B	
	Type	CL Type has LED indicators / CD Type has Full LCD Display	

Hayward is a registered trademark
of Hayward Industries, Inc.
© 2020 Hayward Industries, Inc.

USA: 1.888.429.4635 • Fax: 1.888.778.8410 • One Hayward Industrial Drive • Clemmons, NC 27012 • Email: hfcsales@hayward.com
Canada: 1.888.238.7665 • Fax: 1.905.829.3636 • 2880 Plymouth Drive • Oakville, ON L6H 5R4 • Email: hflowcanada@hayward.com
Visit us at: haywardflowcontrol.com

HRSN4A~4D Series On/Off & Proportional Electric Actuators

FOR BALL AND BUTTERFLY VALVES UP TO 14”

KEY FEATURES

- Units are equipped with two (2) volt-free Form A Auxiliary switches
- ISO5211 compliant mounting with removable double square female drives and inserts
- 120VAC operation standard, with 24VAC/VDC, 230VAC and 3 Phase options available
- Raised visual position indicator
- NEMA 4X/IP67 compliant
- Two (2) 3/4" EMT ports for ease of field wiring

OPTIONS

- Local Control Stations
- IP68 Submersion
- Battery Backup
- Interchangeable ISO5211 Flange & Drives
- Torque Switches

TECHNICAL INFORMATION

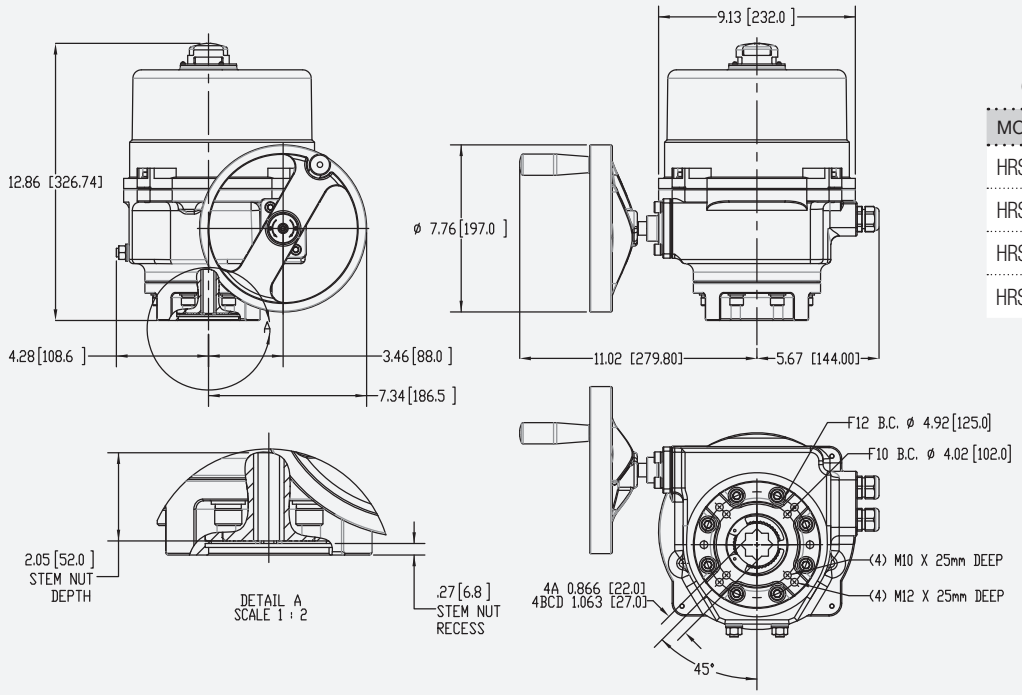

COVER REMOVAL CLEARANCE		WEIGHT
MODEL	IN/MM	LBS/KG
HRSN4A	8 / 200	53.9 / 24.5
HRSN4B	8 / 200	53.9 / 24.5
HRSN4C	8 / 200	53.9 / 24.5
HRSN4D	8 / 200	53.9 / 24.5

HRSN4A~4D Series
On/Off & Proportional Electric Actuators

FOR BALL AND BUTTERFLY VALVES UP TO 14"

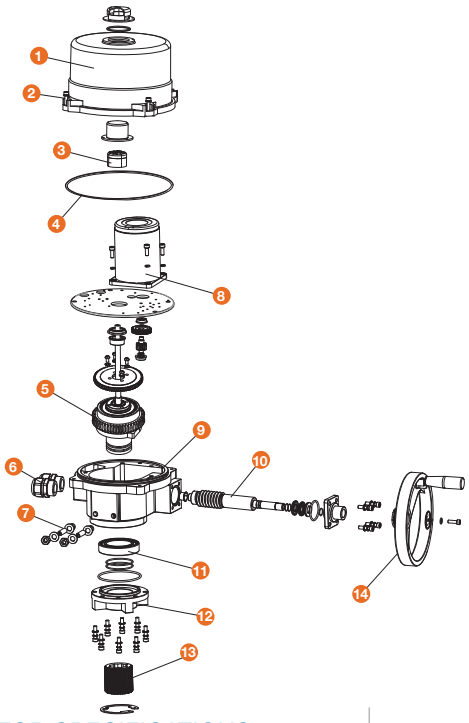

PARTS LIST

1. Cast Aluminum Cover
2. Captured Cover Screws
3. High Visibility Position Indicator
4. Cover O-Ring Seal
5. Epicyclic Transmission Set
6. EMT Glands
7. External Mechanical Stops
8. Drive Motor
9. Cast Aluminum Housing
10. Worm Override Shaft
11. Heavy Final Drive Bearing
12. ISO5211 Flange
13. Splined Drive Insert
14. Handwheel w/Collapsible Knob

ACTUATOR SPECIFICATIONS			HRSN4A	HRSN4B	HRSN4C	HRSN4D
Supply	Torque Output (**in-lb** / Nm)		**3540 /** 400	**5310 /** 600	**7080 /** 800	**8850 /** 1000
12VAC* - 12VDC*	Current Draw (Start / Run / LRA)		11.4A / 9.4A / 24.4A	11.4A / 9.4A / 24.4A	11.4A / 9.4A / 24.4A	-
	Speed (90°) DC-60Hz/50Hz, seconds		21 / 21	28 / 28	34 / 34	-
	Motor - 12V DC Perm Magnet 2 Pole Brush		40W	40W	40W	-
	On/Off / **Proportional**	Duty Cycle (IEC60034)	75% (S2-15 min) / **75% (S4-75%)**			-
		Motor Protection, Temp / Class	All - 130°C / Class B			-
		Motor Starts, per hour, Max	All - 600			-
24VAC - 24VDC	Current Draw (Start / Run / LRA)		7.0A / 5.8A / 15A	7.0A / 5.8A / 15A	7.0A / 5.8A / 15A	10.5A / 7.8A / 22A
	Speed (90°) DC-60Hz/50Hz, seconds		21 / 21	28 / 28	34 / 34	34 / 34
	Motor - 24V DC Perm Magnet 2 Pole Brush		40W	40W	40W	90W
	On/Off / **Proportional**	Duty Cycle (IEC60034)	75% (S2-15 min) / **75% (S4-75%)**			
		Motor Protection, Temp / Class	All - 130°C / Class B			
		Motor Starts, per hour, Max	All - 600			
120VAC	Current Draw (Start / Run / LRA)		3.0A / 1.8A / 3.5A	3.0A / 1.8A / 3.5A	3.0A / 1.8A / 3.5A	3.8A / 2.3A / 4.8A
	Speed (90°) 60Hz / 50Hz, seconds		24 / 29	33 / 39	39 / 47	39 / 47
	Motor - 120V Capacitor Run TENV		90W	90W	90W	120W
	On/Off - Std Duty / **On/Off - Ext Duty & Proportional**	Duty Cycle (IEC60034)	25% (S2-15 min) / **75% (S4-75%)**			
		Motor Protection, Temp / Class	155°C / Class F / **180°C / Class H**			
		Motor Starts, per hour, Max	600 / **1200**			
230VAC	Current Draw (Start / Run / LRA)		1.7A / 0.9A / 1.9A	1.7A / 0.9A / 1.9A	1.7A / 0.9A / 1.9A	2.2A / 1.1A / 2.4A
	Speed (90°) 60Hz / 50Hz, seconds		24 / 29	33 / 39	39 / 47	39 / 47
	Motor - 230V Capacitor Run TENV		90W	90W	90W	120W
	On/Off - Std Duty / **On/Off - Ext Duty & Proportional**	Duty Cycle (IEC60034)	25% (S2-15 min) / **75% (S4-75%)**			
		Motor Protection, Temp / Class	155°C / Class F / **180°C / Class H**			
		Motor Starts, per hour, Max	600 / **1200**			
All	Environmental Rating		NEMA 4/4X & IP67			
	Electrical Entry (2)		3/4" EMT or Polyamide gland			
	Control		On/Off, Proportional, 2 Pos RO, RC & 3 Position			
	Auxiliary Switch - End of Travel		(2) Form A Volt-Free, Rated 10A @ 250vac			
	Ambient Operating Range		-22°F to +158°F (-30°C to +70°C)			
	Humidity Range		0-95% RH			
	Altitude Limit		9850 ft / 3000 m			

Hayward is a registered trademark of Hayward Industries, Inc.
© 2020 Hayward Industries, Inc.

USA: 1.888.429.4635 • Fax: 1.888.778.8410 • One Hayward Industrial Drive • Clemmons, NC 27012 • Email: hfcsales@hayward.com
Canada: 1.888.238.7665 • Fax: 1.905.829.3636 • 2880 Plymouth Drive • Oakville, ON L6H 5R4 • Email: hflowcanada@hayward.com
Visit us at: haywardflowcontrol.com

HRSN4A~4D Series Electronic Fail-Safe Actuator Battery Backup

SAFE

KEY FEATURES

- Stored Energy System provides positive valve positioning upon loss of mains power
- Up to 8850"lbs torque for butterfly valves up to 14"
- 24VAC/VDC operation standard, with 120vac and 230vac transformer options available
- Field selectable fail CW or CCW operation for complete flexibility
- Self-Contained charge and discharge control of the Lithium-Ion Battery provides maximum life from the reserve energy system
- Battery Pack is field replaceable to minimize down-time
- Stored Energy status indicators show system health
- Fault-Out contact is standard and allows remote monitoring of the stored energy system performance.
- ISO5211 Mechanical mount with removable double-square female drive socket
- Two (2) 3/4" EMT ports for ease of field wiring
- NEMA 4/4X & IP67 compliant
- Optional Torque Switches

HRS Series Electronic Fail-Safe Actuators are intended to provide positive positioning in power-fail conditions.

TECHNICAL INFORMATION

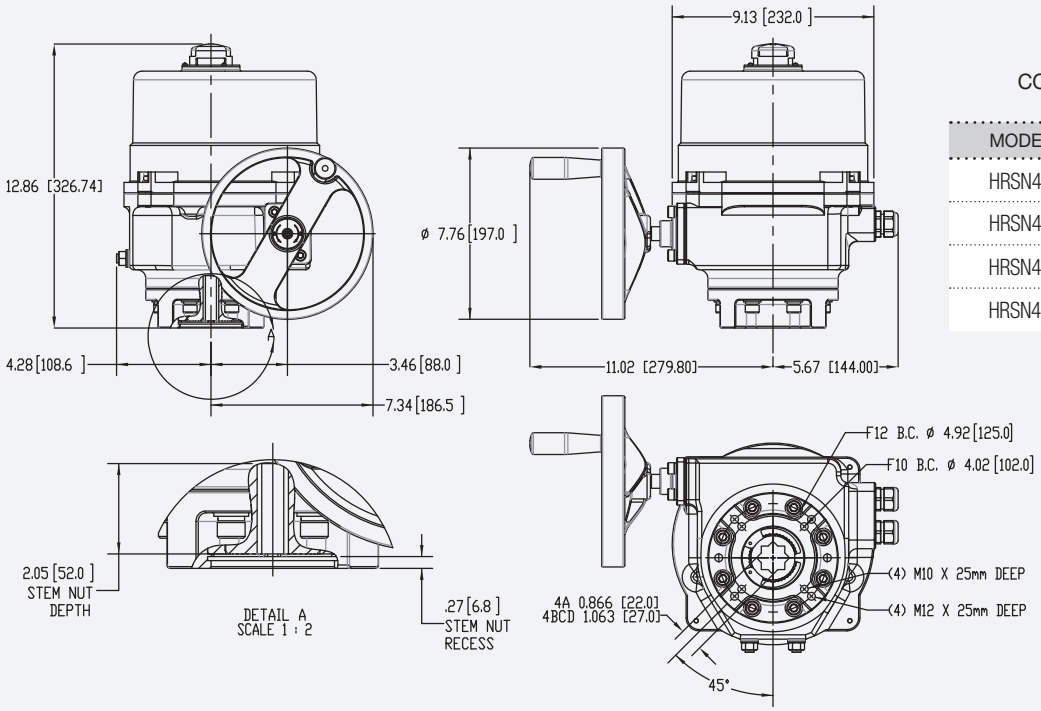

COVER REMOVAL CLEARANCE		WEIGHT
MODEL	IN/MM	LBS/KG
HRSN4A	8 / 200	57.2 / 26
HRSN4B	8 / 200	57.2 / 26
HRSN4C	8 / 200	57.2 / 26
HRSN4D	8 / 200	57.2 / 26

HRSN4A~4D Series
Electronic Fail-Safe Actuator Battery Backup

FOR BALL AND BUTTERFLY VALVES UP TO 14"

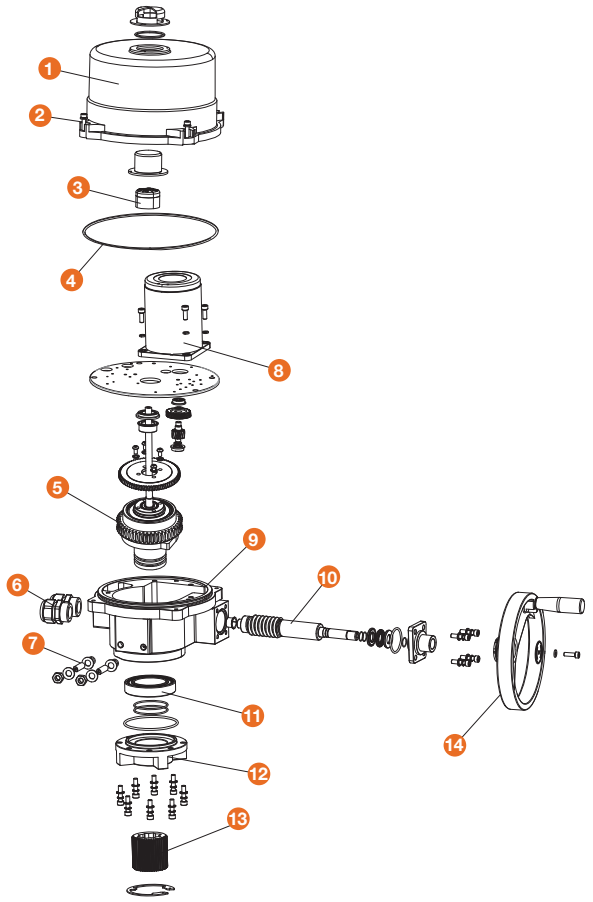

PARTS LIST

1. Cast Aluminum Cover
2. Captured Cover Screws
3. High Visibility Position Indicator
4. Cover O-Ring Seal
5. Epicyclic Transmission Set
6. EMT Glands
7. External Mechanical Stops
8. Drive Motor
9. Cast Aluminum Housing
10. Worm Override Shaft
11. Heavy Final Drive Bearing
12. ISO5211 Flange
13. Splined Drive Insert
14. Handwheel w/Collapsible Knob

ACTUATOR SPECIFICATIONS			HRSN4A..20	HRSN4B..20	HRSN4C..20	HRSN4D..20
Supply	Torque Output (**in-lbs** / Nm)		**3540** / 400	**5310** / 600	**7080** / 800	**8850** / 1000
24VAC ~ 24VDC	Current Draw (Start / Run / LRA)		7.0A / 5.8A / 15A	7.0A / 5.8A / 15A	7.0A / 5.8A / 15A	10.5A / 7.8A / 22A
	Speed (90°) DC-60Hz/50Hz, seconds		21 / 21	28 / 28	34 / 34	34 / 34
	Motor - 24V DC Perm Magnet 2 Pole Brush		40W	40W	40W	90W
	On/Off / **Proportional**	Duty Cycle (IEC60034)	75% (S2-15 min) / **75% (S4-75%)**			
		Motor Protection, Temp / Class	All - 130°C / Class B			
		Motor Starts, per hour, Max	All - 600			
120VAC	Requires 120:24 Transformer Pack, 500VA		HRSBBC120-500	HRSBBC120-500	HRSBBC120-500	HRSBBC120-500
230VAC	Requires 230:24 Transformer Pack, 500VA		HRSBBC230-500	HRSBBC230-500	HRSBBC230-500	HRSBBC230-500
All	Manual Override		Clutchless Handwheel	Clutchless Handwheel	Clutchless Handwheel	Clutchless Handwheel
	Environmental Rating		NEMA 4/4X & IP67			
	Electrical Entry (2)		3/4" EMT or Polyamide gland			
	Control		On/Off, Proportional			
	Auxiliary Switch - End of Travel		(2) Form A Volt-Free, Rated 10A @ 250vac			
	Ambient Operating Range		-22°F to +158°F / -30°C to +70°C			
	Humidity Range		0-95% RH			
	Altitude Limit		9850 ft / 3000 m			
	BATTERY SPECIFICATIONS		HRSN4A~4D (20 SERIES)			
	Type		22.2V Lithium-Ion pack with charge / discharge control			

Hayward is a registered trademark of Hayward Industries, Inc.
© 2020 Hayward Industries, Inc.

USA: 1.888.429.4635 • Fax: 1.888.778.8410 • One Hayward Industrial Drive • Clemmons, NC 27012 • Email: hfcsales@hayward.com
Canada: 1.888.238.7665 • Fax: 1.905.829.3636 • 2880 Plymouth Drive • Oakville, ON L6H 5R4 • Email: hflowcanada@hayward.com
Visit us at: haywardflowcontrol.com

HRCK4, HRCB4 Series Electric Actuator Local Control

TYPE CK

TYPE CB

KEY FEATURES

- Local Control Stations allow stand-alone or isolated operation from PLC systems
- CK Type has Knob/Key Type Switches
- CB Type has Dual Knob Type Switches
- Available from 3540"lbs to 20,350"lbs
- 120VAC operation standard, with 24VAC/VDC, 230VAC and 3 Phase options available
- Units equipped with two (2) volt-free Form A Auxiliary switches
- Anti-Condensate heater standard
- ISO5211 compliant mechanical mount with remoable double-square female drive socket
- Two (2) 3/4" EMT ports for ease of field wiring
- NEMA 4/4x/IP67 Compliant (CB Type)
- NEMA 4/4x/IP65 Compliant (CK Type)
- Raised visual position indicator in high contrast red/green color
- Clutchless Hand Wheel override standard
- Collapsible spinner handle
- Optional Torque Switches

TECHNICAL INFORMATION

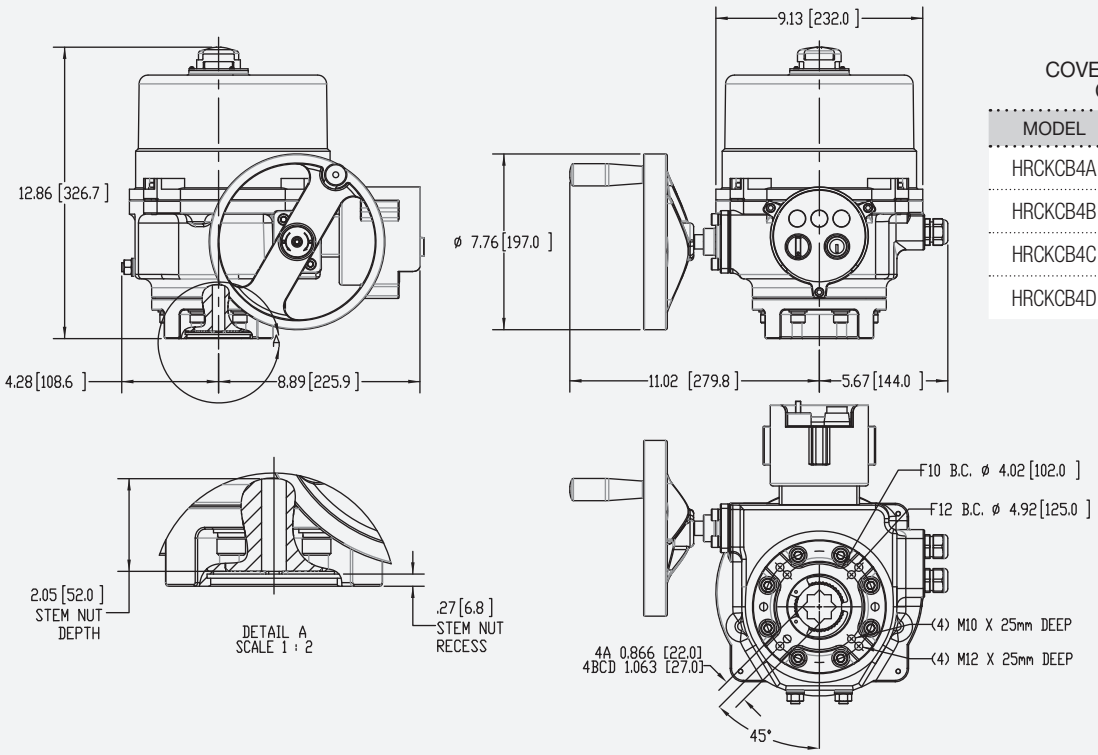

COVER REMOVAL CLEARANCE		WEIGHT
MODEL	IN/MM	LBS/KG
HRCKCB4A	8 / 200	60.5 / 27.5
HRCKCB4B	8 / 200	60.5 / 27.5
HRCKCB4C	8 / 200	60.5 / 27.5
HRCKCB4D	8 / 200	60.5 / 27.5

HRCK4, HRCB4 Series
Electric Actuator with Local Control Station

FOR BALL AND BUTTERFLY VALVES UP TO 14"

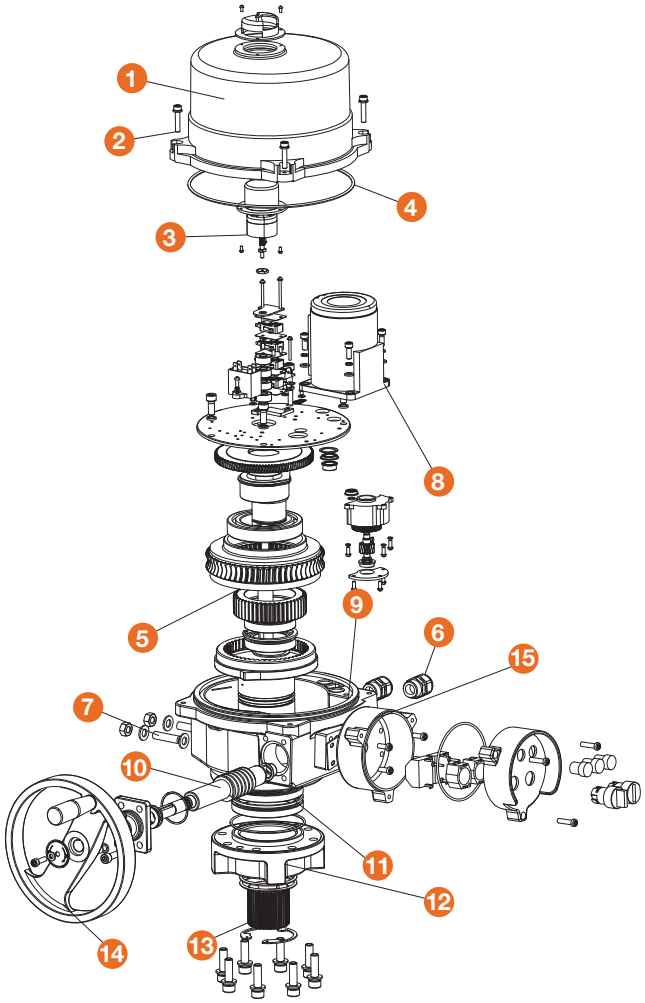

PARTS LIST

1. Cast Aluminum Cover
2. Captured Cover Screws
3. High Visibility Position Indicator
4. Cover O-Ring Seal
5. Epicyclic Transmission Set
6. EMT Glands
7. External Mechanical Stops
8. Drive Motor
9. Cast Aluminum Housing
10. Worm Override Shaft
11. Heavy Final Drive Bearing
12. ISO5211 Flange
13. Splined Drive Insert
14. Handwheel w/Collapsible Knob
15. Cast Aluminium Control Housing

ACTUATOR SPECIFICATIONS		HRCK4A HRCB4A	HRCK4B HRCB4B	HRCK4C HRCB4C	HRCK4D HRCB4D	HRCK4E HRCB4E	HRCK4F HRCB4F
Supply	Torque Output (**lbf-in** / Nm)	**3540** / 400	**5310** / 600	**7080** / 800	**8850** / 1000	**15040** / 1700	**20350** / 2300
24VAC - 24VDC	Current Draw (Start / Run / LRA)	7.0A / 5.8A / 15A	7.0A / 5.8A / 15A	7.0A / 5.8A / 15A	10.5A / 7.8A / 22A	-	-
	Speed (90°) DC, seconds	21	28	34	34	-	-
	Motor - 24vdc Perm Magnet Brush Type	40W	40W	40W	60W	-	-
120V	Current Draw (Start / Run / LRA)	2.95A / 1.8A / 3.5A	2.95A / 1.8A / 3.5A	2.95A / 1.8A / 3.5A	3.8A / 2.3A / 4.8A	7.2A / 4.5A / 9.4A	7.2A / 4.5A / 9.4A
	Speed (90°) 60Hz / 50Hz, seconds	24 / 29	33 / 39	39 / 47	39 / 47	28 / 34	39 / 47
	Motor - 120vac Split-Phase Cap TENV	90W	90W	90W	120W	200W	200W
230V	Current Draw (Start / Run / LRA)	1.71A / 0.91A / 1.9A	1.71A / 0.91A / 1.9A	1.71A / 0.91A / 1.9A	2.16A / 1.1A / 2.43A	4.05A / 2.2A / 4.5A	4.05A / 2.2A / 4.5
	Speed (90°) 60Hz / 50Hz, seconds	24 / 29	33 / 39	39 / 47	39 / 47	28 / 34	39/ 47
	Motor - 230vac Split-Phase Cap TENV	90W	90W	90W	120W	200W	200W
All	Electrical Entry (2)	3/4" EMT or ABS gland					
	Control	On/Off or Proportional					
	Ambient Operating Range	-22°F to +158°F / -30°C to +70°C					
	LOCAL CONTROL STATION	HRCK4A~4F, HRCB4A~4F					
	Type	CK Type has Knob/Key Type Switches / CB Type has Knob Type Switches					

Hayward is a registered trademark
of Hayward Industries, Inc.
© 2020 Hayward Industries, Inc.

USA: 1.888.429.4635 • Fax: 1.888.778.8410 • One Hayward Industrial Drive • Clemmons, NC 27012 • Email: hfcsales@hayward.com
Canada: 1.888.238.7665 • Fax: 1.905.829.3636 • 2880 Plymouth Drive • Oakville, ON L6H 5R4 • Email: hflowcanada@hayward.com
Visit us at: haywardflowcontrol.com

HRCL4, HRCD4 Series Electric Actuator Local Control

TYPE CL

TYPE CD

KEY FEATURES

- Local Control Stations allow stand-alone or isolated operation from PLC systems
- CL Type has LED Indicators
- CD Type has Full LCD Display
- Available from 3540"lbs to 20,350"lbs
- 120VAC operation standard, with 24VAC/VDC, 230VAC and 3 Phase options available
- Units equipped with two (2) volt-free Form A Auxiliary switches
- Anti-Condensate heater standard
- ISO5211 compliant mechanical mount with removable double-square female drive socket
- Two (2) 3/4" EMT ports for ease of field wiring
- NEMA 4/4x/IP67 Compliant
- Raised visual position indicator in high contrast red/green color
- Clutchless Hand Wheel override standard
- Collapsible spinner handle
- Optional Torque Switches

TECHNICAL INFORMATION

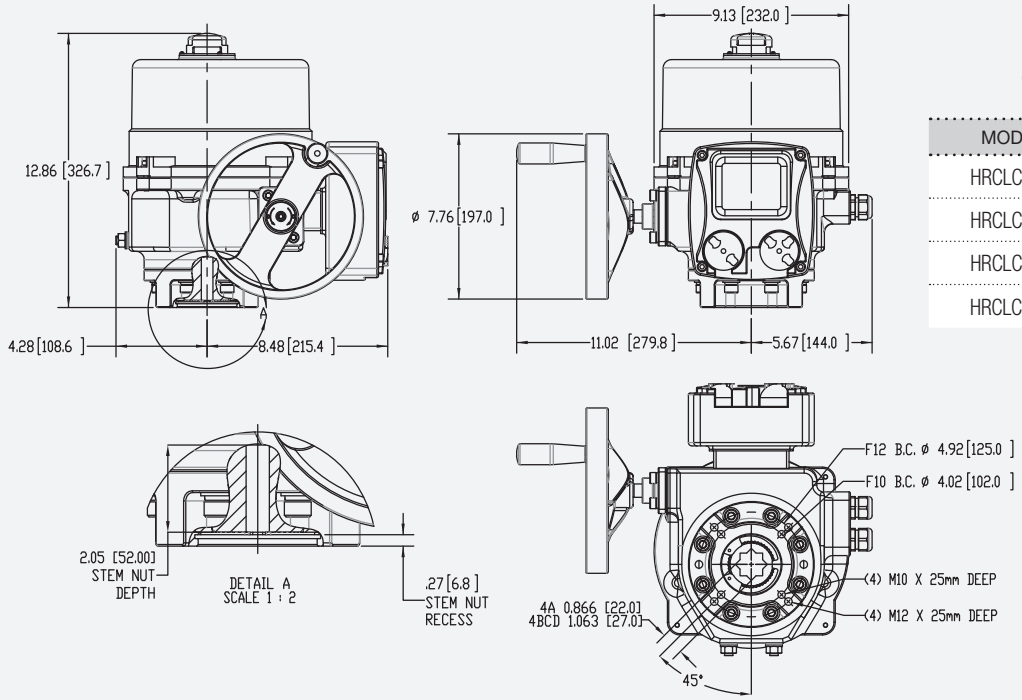

COVER REMOVAL CLEARANCE		WEIGHT
MODEL	IN/MM	LBS/KG
HRCLCD4A	8 / 200	62.7 / 29
HRCLCD4B	8 / 200	62.7 / 29
HRCLCD4C	8 / 200	62.7 / 29
HRCLCD4D	8 / 200	62.7 / 29

HRCL4, HRCD4 Series
Electric Actuator with Local Control Station

FOR BALL AND BUTTERFLY VALVES UP TO 14"

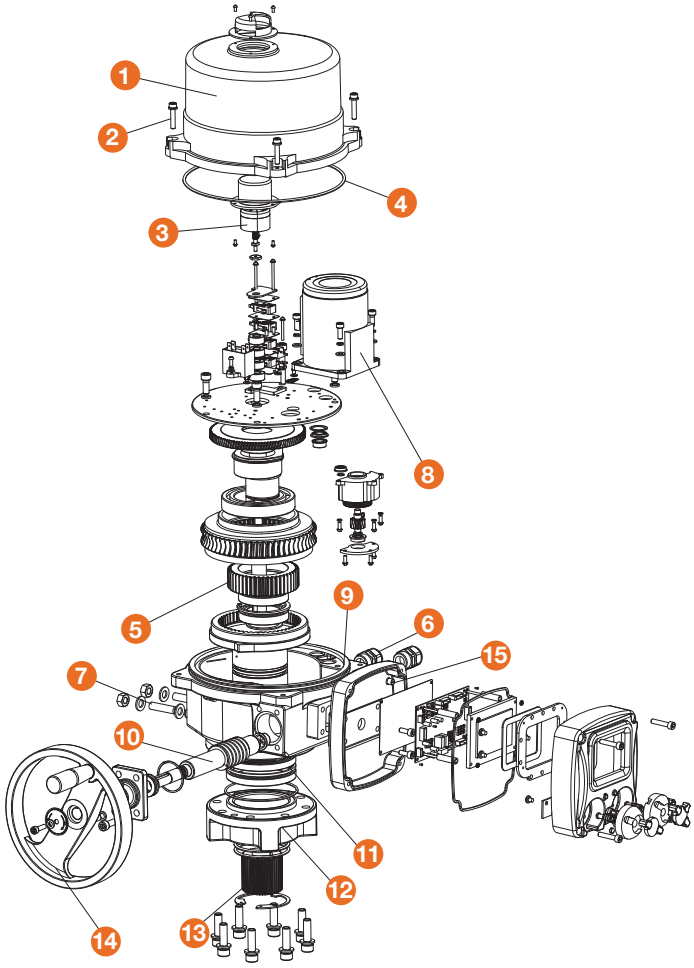

PARTS LIST

1. Cast Aluminum Cover
2. Captured Cover Screws
3. High Visibility Position Indicator
4. Cover O-Ring Seal
5. Epicyclic Transmission Set
6. EMT Glands
7. External Mechanical Stops
8. Drive Motor
9. Cast Aluminum Housing
10. Worm Override Shaft
11. Heavy Final Drive Bearing
12. ISO5211 Flange
13. Splined Drive Insert
14. Handwheel w/Collapsible Knob
15. Cast Aluminium Control Housing

ACTUATOR SPECIFICATIONS		HRCL4A HRCD4A	HRCL4B HRCD4B	HRCL4C HRCD4C	HRCL4D HRCD4D	HRCL4E HRCD4E	HRCL4F HRCD4F
Supply	Torque Output (**lbf-in** / Nm)	**3540** / 400	**5310** / 600	**7080** / 800	**8850** / 1000	**15040** / 1700	**20350** / 2300
24VAC - 24VDC	Current Draw (Start / Run / LRA)	7.0A / 5.8A / 15A	7.0A / 5.8A / 15A	7.0A / 5.8A / 15A	10.5A / 7.8A / 22A	-	-
	Speed (90°) DC, seconds	21	28	34	34	-	-
	Motor - 24vdc Perm Magnet Brush Type	40W	40W	40W	60W	-	-
120V	Current Draw (Start / Run / LRA)	2.95A / 1.8A / 3.5A	2.95A / 1.8A / 3.5A	2.95A / 1.8A / 3.5A	3.8A / 2.3A / 4.8A	7.2A / 4.5A / 9.4A	7.2A / 4.5A / 9.4A
	Speed (90°) 60Hz / 50Hz, seconds	24 / 29	33 / 39	39 / 47	39 / 47	28 / 34	39 / 47
	Motor - 120vac Split-Phase Cap TENV	90W	90W	90W	120W	200W	200W
230V	Current Draw (Start / Run / LRA)	1.71A / 0.91A / 1.9A	1.71A / 0.91A / 1.9A	1.71A / 0.91A / 1.9A	2.16A / 1.1A / 2.43A	4.05A / 2.2A / 4.5A	4.05A / 2.2A / 4.5
	Speed (90°) 60Hz / 50Hz, seconds	24 / 29	33 / 39	39 / 47	39 / 47	28 / 34	39/ 47
	Motor - 230vac Split-Phase Cap TENV	90W	90W	90W	120W	200W	200W
All	Electrical Entry (2)	3/4" EMT or ABS gland					
	Control	On/Off or Proportional					
	Ambient Operating Range	-22°F to +158°F / -30°C to +70°C					
	LOCAL CONTROL STATION	HRCL4A~4F, HRCD4A~4F					
	Type	CL Type has LED indicators / CD Type has Full LCD Display					

Hayward is a registered trademark
of Hayward Industries, Inc.
© 2020 Hayward Industries, Inc.

USA: 1.888.429.4635 • Fax: 1.888.778.8410 • One Hayward Industrial Drive • Clemmons, NC 27012 • Email: hfcsales@hayward.com
Canada: 1.888.238.7665 • Fax: 1.905.829.3636 • 2880 Plymouth Drive • Oakville, ON L6H 5R4 • Email: hflowcanada@hayward.com
Visit us at: haywardflowcontrol.com

HRSN4E & HRSN4F Series On/Off & Proportional Electric Actuators

FOR BALL AND BUTTERFLY VALVES UP TO 20”

KEY FEATURES

- Units are equipped with two (2) volt-free Form A Auxiliary switches
- ISO5211 compliant mounting with double square female drives and inserts
- 120VAC operation standard, with 24VAC/VDC, 230VAC and 3 Phase options available
- Raised visual position indicator
- NEMA 4X/IP67 compliant
- Two (2) EMT entry ports with sealed cable glands

OPTIONS

- Local Control Stations
- IP68 Submersion
- Interchangeable ISO5211 Flange & Drives
- Torque Switches

TECHNICAL INFORMATION

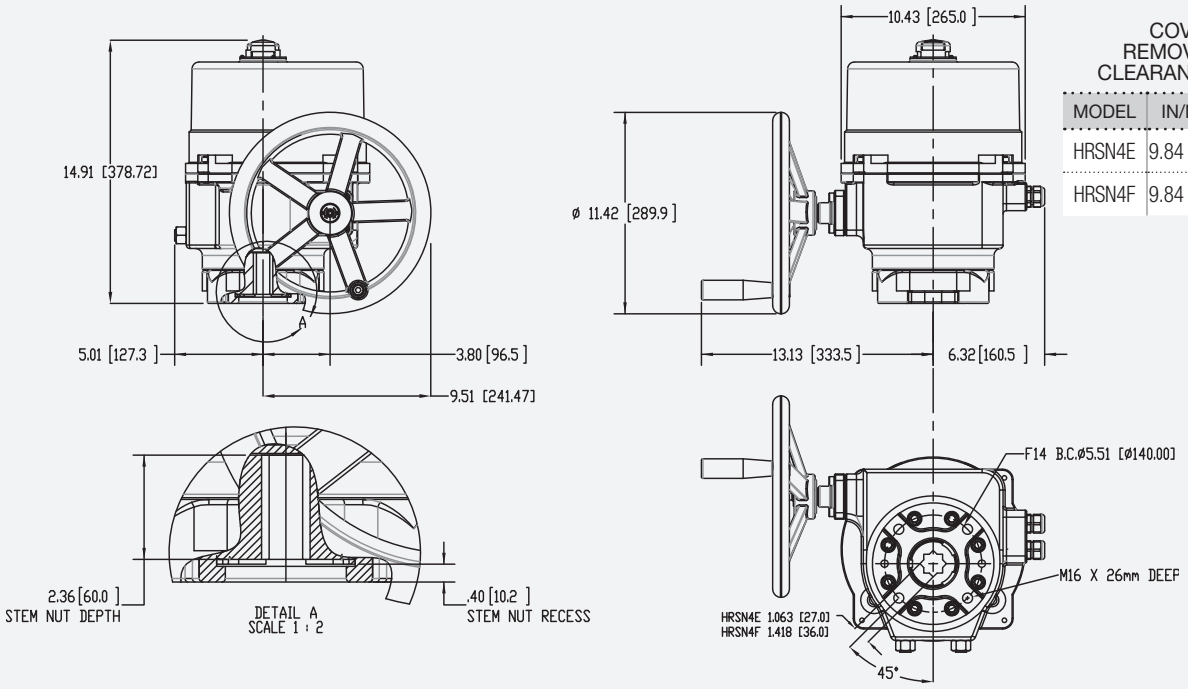

COVER REMOVAL CLEARANCE		WEIGHT
MODEL	IN/MM	LBS/KG
HRSN4E	9.84 / 250	81.4 / 37
HRSN4F	9.84 / 250	81.4 / 37

HRSNE & HRSNF Series
On/Off & Proportional Electric Actuators

FOR BALL AND BUTTERFLY VALVES UP TO 20"

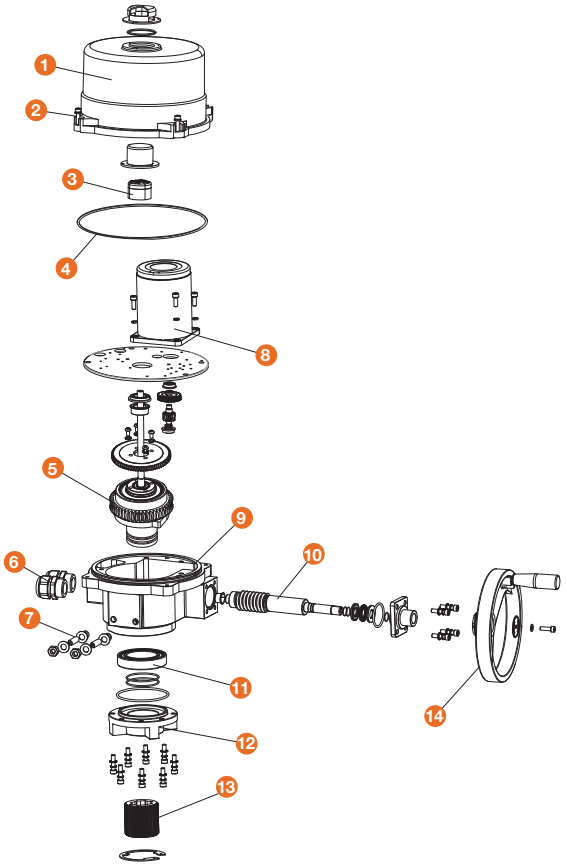

PARTS LIST

1. Cast Aluminum Cover
2. Captured Cover Screws
3. High Visibility Position Indicator
4. Cover O-Ring Seal
5. Epicyclic Transmission Set
6. EMT Glands
7. External Mechanical Stops
8. Drive Motor
9. Cast Aluminum Housing
10. Worm Override Shaft
11. Heavy Final Drive Bearing
12. ISO5211 Flange
13. Splined Drive Insert
14. Handwheel w/Collapsible Knob

ACTUATOR SPECIFICATIONS			HRSN4E	HRSN4F
Supply	Torque Output (**in-lb** / Nm)		**15,040 /** 1700	**20,350 /** 2300
24VAC - 24VDC	Current Draw (Start / Run / LRA)		10.5A / 7.8A / 22A	-
	Speed (90°) DC-60Hz/50Hz, seconds		25 / 25	-
	Motor - 24V DC Perm Magnet 2 Pole Brush		90W	-
	On/Off / **Proportional**	Duty Cycle (IEC60034)	50% / **50%**	-
		Motor Protection, Temp / Class	All - 130°C / Class B	-
		Motor Starts, per hour, Max	All - 600	-
120VAC	Current Draw (Start / Run / LRA)		7.2A / 4.5A / 9.4A	7.2A / 4.5A / 9.4A
	Speed (90°) 60Hz / 50Hz, seconds		28 / 34	39 / 47
	Motor - 120V Capacitor Run TENV		200W	200W
	On/Off - Std Duty / **On/Off - Ext Duty & Proportional**	Duty Cycle (IEC60034)	25% (S2-15 min) / **50% (S4-50%)**	
		Motor Protection, Temp / Class	155°C / Class F / **180°C / Class H**	
		Motor Starts, per hour, Max	600 / **1200**	
230VAC	Current Draw (Start / Run / LRA)		4.1A / 2.2A / 4.5A	4.1A / 2.2A / 4.5A
	Speed (90°) 60Hz / 50Hz, seconds		28 / 34	39 / 47
	Motor - 230V Capacitor Run TENV		200W	200W
	On/Off - Std Duty / **On/Off - Ext Duty & Proportional**	Duty Cycle (IEC60034)	25% (S2-15 min) / **50% (S4-50%)**	
		Motor Protection, Temp / Class	155°C / Class F / **180°C / Class H**	
		Motor Starts, per hour, Max	600 / **1200**	
All	Environmental Rating		NEMA 4/4X & IP67	
	Electrical Entry (2)		3/4" EMT or Polyamide gland	
	Control		On/Off, Proportional, 2 Pos RO, RC & 3 Position	
	Auxiliary Switch - End of Travel		(2) Form A Volt-Free, Rated 10A @ 250vac	
	Ambient Operating Range		-22°F to +158°F (-30°C to +70°C)	
	Humidity Range		0-95% RH	
	Altitude Limit		9850 ft / 3000 m	

Hayward is a registered trademark of Hayward Industries, Inc.
© 2020 Hayward Industries, Inc.

USA: 1.888.429.4635 • Fax: 1.888.778.8410 • One Hayward Industrial Drive • Clemmons, NC 27012 • Email: hfcsales@hayward.com
Canada: 1.888.238.7665 • Fax: 1.905.829.3636 • 2880 Plymouth Drive • Oakville, ON L6H 5R4 • Email: hflowcanada@hayward.com
Visit us at: haywardflowcontrol.com

HRSN5 Series On/Off & Proportional Electric Actuators

FOR BALL AND BUTTERFLY VALVES UP TO 24”

KEY FEATURES

- Units are equipped with two (2) volt-free Form A Auxiliary switches
- ISO5211 compliant mounting with double square female drive
- 120VAC operation standard, 230VAC and 3 Phase options available
- Visual position indicator
- NEMA 4X/IP67 compliant
- Two (2) EMT entry ports with sealed cable glands

OPTIONS

- Local Control Stations
- IP68 Submersion

TECHNICAL INFORMATION

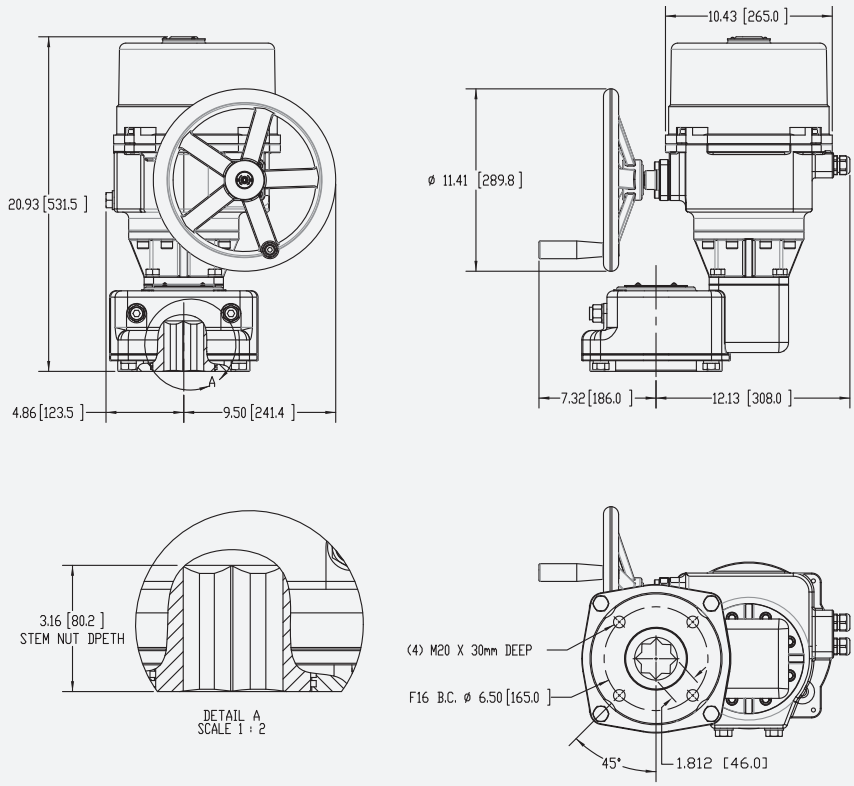

COVER REMOVAL CLEARANCE		WEIGHT
MODEL	IN/MM	LBS/KG
HRSN5A	9.84 / 250	174 / 79
HRSN5B	9.84 / 250	174 / 79

HRSN5 Series
On/Off & Proportional Electric Actuators

FOR BALL AND BUTTERFLY VALVES UP TO 24"

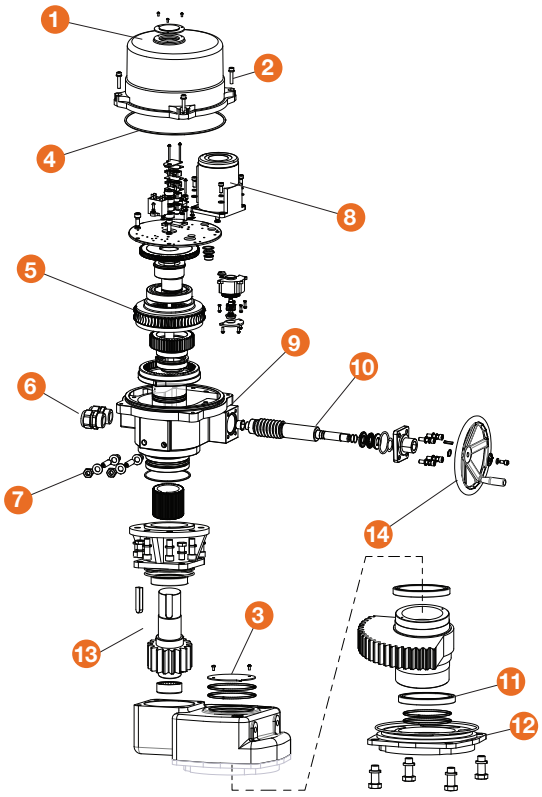

PARTS LIST

1. Cast Aluminum Cover
2. Captured Cover Screws
3. High Visibility Position Indicator
4. Cover O-Ring Seal
5. Epicyclic Transmission Set
6. EMT Glands
7. External Mechanical Stops
8. Drive Motor
9. Cast Aluminum Housing
10. Worm Override Shaft
11. Heavy Final Drive Bearing
12. ISO5211 Flange
13. Sub Transmission
14. Handwheel

ACTUATOR SPECIFICATIONS			HRSN5A	HRSN5B
Supply*	Torque Output (**in-lb** / Nm)		**30,970** / 3500	**44,250** / 5000
120VAC	Current Draw (Start / Run / LRA)		7.2A / 4.5A / 9.4A	7.2A / 4.5A / 9.4A
	Motor - 120V Capacitor Run TENV		200W	200W
230VAC	Current Draw (Start / Run / LRA)		4.1A / 2.2A / 4.5A	4.1A / 2.2A / 4.5A
	Motor - 230V Capacitor Run TENV		200W	200W
220/3ph	Current Draw (Start / Run / LRA)		3.6A / 1.9A / 4.5A	3.6A / 1.9A / 4.5A
	Motor - 220V polyphase TENV		200W	200W
380/3ph	Current Draw (Start / Run / LRA)		2.1A / 1.1A / 2.6A	2.1A / 1.1A / 2.6A
	Motor - 380V polyphase TENV		200W	200W
480/3ph	Current Draw (Start / Run / LRA)		1.2A / 0.9A / 2.1A	1.2A / 0.9A / 2.1A
	Motor - 480V polyphase TENV		200W	200W
575/3ph	**575/3 On/Off - Basic Only**** Current Draw (Start / Run / LRA)		1.0A / 0.7A / 1.9A	1.0A / 0.7A / 1.9A
	Motor - 575V polyphase TENV		200W	200W
All (as noted)	On/Off / **Proportional**	Duty Cycle (IEC60034)	25% (S2-15 min) / **50% (S4-50%)**	
		Motor Protection, Temp / Class	155°C / Class F / **180°C / Class H (Single Phase Only)**	
		Motor Starts, per hour, Max	600 / **1200**	
	Speed (90°) 60Hz/50Hz, seconds		63 / 76	88 / 105
	Environmental Rating		NEMA 4/4X & IP67	
	Electrical Entry (2)		3/4" EMT or Polyamide Gland	
	Control (120/230VAC)		On/Off, Proportional, 2 Pos RO, RC & 3 Position	
	Control (220/3 ~ 480/3)		On/Off, Proportional, in six levels of control and protection (some limited applications)	
	Control (575/3)		On/Off - Basic (follow On/Off - Std Duty performance data)	
	Auxiliary Switch - End of Travel		(2) Form A Volt-Free, Rated 10A @ 250vac	
	Ambient Operating Range		-22°F to +158°F (-30°C to +70°C)	
	Humidity Range		0-95% RH	
	Altitude Limit		9850 ft / 3000 m	

**For use with existing Motor Control Centers only

Hayward is a registered trademark
of Hayward Industries, Inc.
© 2020 Hayward Industries, Inc.

USA: 1.888.429.4635 • Fax: 1.888.778.8410 • One Hayward Industrial Drive • Clemmons, NC 27012 • Email: hfcsales@hayward.com
Canada: 1.888.238.7665 • Fax: 1.905.829.3636 • 2880 Plymouth Drive • Oakville, ON L6H 5R4 • Email: hflowcanada@hayward.com
Visit us at: haywardflowcontrol.com

HRSN3 Series On/Off & Proportional Electric Actuators

FOR BALL AND BUTTERFLY VALVES UP TO 8”

3-PHASE

KEY FEATURES

- Units are equipped with two (2) volt-free Form A Auxiliary switches
- ISO5211 compliant mounting with removable double square female drives and inserts
- Raised visual position indicator
- NEMA 4X/IP67 compliant
- Two (2) EMT entry ports with sealed cable glands

OPTIONS

- Basic Interface
- Phase Correction
- Fault Out
- Local Control Stations
- Complete Integral Motor Control Stations
- Interchangeable ISO5211 Flange & Drives
- Torque Switches

TECHNICAL INFORMATION

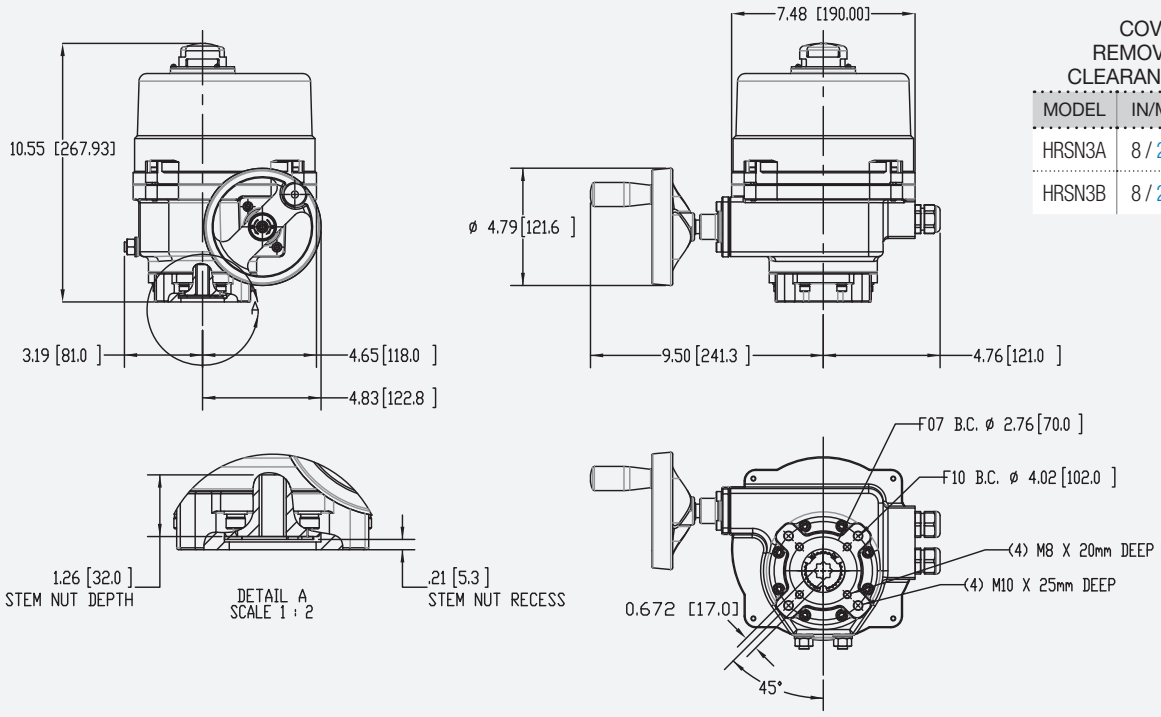

	COVER REMOVAL CLEARANCE	WEIGHT
MODEL	IN/MM	LBS/KG
HRSN3A	8 / 200	28.6 / 13
HRSN3B	8 / 200	28.6 / 13

HRSN3 Series 3-PHASE
On/Off & Proportional Electric Actuators

FOR BALL AND BUTTERFLY VALVES UP TO 8"

ACTUATOR SPECIFICATIONS			HRSN3A	HRSN3B
Supply	Torque Output (in-lb / Nm)		**880** / 100	**1770** / 200
220/3ph	Current Draw (Start / Run / LRA)		0.7A / 0.6A / 1.0A	0.7A / 0.6A / 1.0A
	Speed (90°) 60Hz / 50Hz, seconds		16 / 19	33 / 39
	Motor - 220v polyphase TENV		40W	40W
	On/Off / **Proportional**	Duty Cycle (IEC60034)	25% (S2-15 min) / **75% (S4-75%)**	
		Motor Protection, Temp / Class	155°C / Class F	
		Motor Starts, per hour, Max	600	
380/3ph	Current Draw (Start / Run / LRA)		0.4A / 0.3A / 0.6A	0.4A / 0.3A / 0.6A
	Speed (90°) 60Hz / 50Hz, seconds		16 / 19	33 / 39
	Motor - 380v polyphase TENV		40W	40W
	On/Off / **Proportional**	Duty Cycle (IEC60034)	25% (S2-15 min) / **75% (S4-75%)**	
		Motor Protection, Temp / Class	155°C / Class F	
		Motor Starts, per hour, Max	600	
480/3ph	Current Draw (Start / Run / LRA)		0.2A / 0.2A / 0.4A	0.2A / 0.2A / 0.4A
	Speed (90°) 60Hz / 50Hz, seconds		16 / 19	33 / 39
	Motor - 480v polyphase TENV		40W	40W
	On/Off / **Proportional**	Duty Cycle (IEC60034)	25% (S2-15 min) / **75% (S4-75%)**	
		Motor Protection, Temp / Class	155°C / Class F	
		Motor Starts, per hour, Max	600	
575/3ph	Current Draw (Start / Run / LRA)		0.2A / 0.2A / 0.3A	0.2A / 0.2A / 0.3A
	Speed (90°) 60Hz / 50Hz, seconds		16 / 19	33 / 39
	Motor - 575v polyphase TENV		40W	40W
	On/Off - Basic	Duty Cycle (IEC60034)	25% (S2-15 min)	
		Motor Protection, Temp / Class	155°C / Class F	
		Motor Starts, per hour, Max	600	
LCS	Environmental Rating		HRSN Series: NEMA 4/4X & IP67 (optional IP68)	
			HRCK Series: NEMA 4/4X & IP65	
			HRCB Series: NEMA 4/4X & IP67	
			HRCL Series: NEMA 4/4X & IP67 (optional IP68)	
			HRCD Series: NEMA 4/4X & IP67 (optional IP68)	
All	Electrical Entry (2)		3/4" EMT or Polyamide gland	
	Control		On/Off, Proportional, in six levels of control and protection (some limited applications)	
	Auxiliary Switch - End of Travel		(2) Form A Volt-Free, Rated 10A @ 250VAC	
	Ambient Operating Range		-22°F to +158°F (-30°C to +70°C)	
	Humidity Range		0-95% RH	
	Altitude Limit		9850 ft / 3000 m	

*See page 14 for actuator exploded view and parts list. See pages 18 & 20 for local control stations exploded views and parts lists.

Hayward is a registered trademark
of Hayward Industries, Inc.
© 2020 Hayward Industries, Inc.

USA: 1.888.429.4635 • Fax: 1.888.778.8410 • One Hayward Industrial Drive • Clemmons, NC 27012 • Email: hfcsales@hayward.com
Canada: 1.888.238.7665 • Fax: 1.905.829.3636 • 2880 Plymouth Drive • Oakville, ON L6H 5R4 • Email: hflowcanada@hayward.com
Visit us at: haywardflowcontrol.com

HRSN4A~4F Series On/Off & Proportional Electric Actuators

FOR BALL AND BUTTERFLY VALVES UP TO 20”

3-PHASE

KEY FEATURES

- Units are equipped with two (2) volt-free Form A Auxiliary switches
- ISO5211 compliant mounting with removable double square female drives and inserts
- Raised visual position indicator
- NEMA 4X/IP67 compliant
- Two (2) 3/4" EMT ports for ease of field wiring

OPTIONS

- Basic Interface
- Phase Correction
- Fault Out
- Local Control Stations
- Complete Integral Motor Control Stations
- Interchangeable ISO5211 Flange & Drives
- Torque Switches

TECHNICAL INFORMATION*

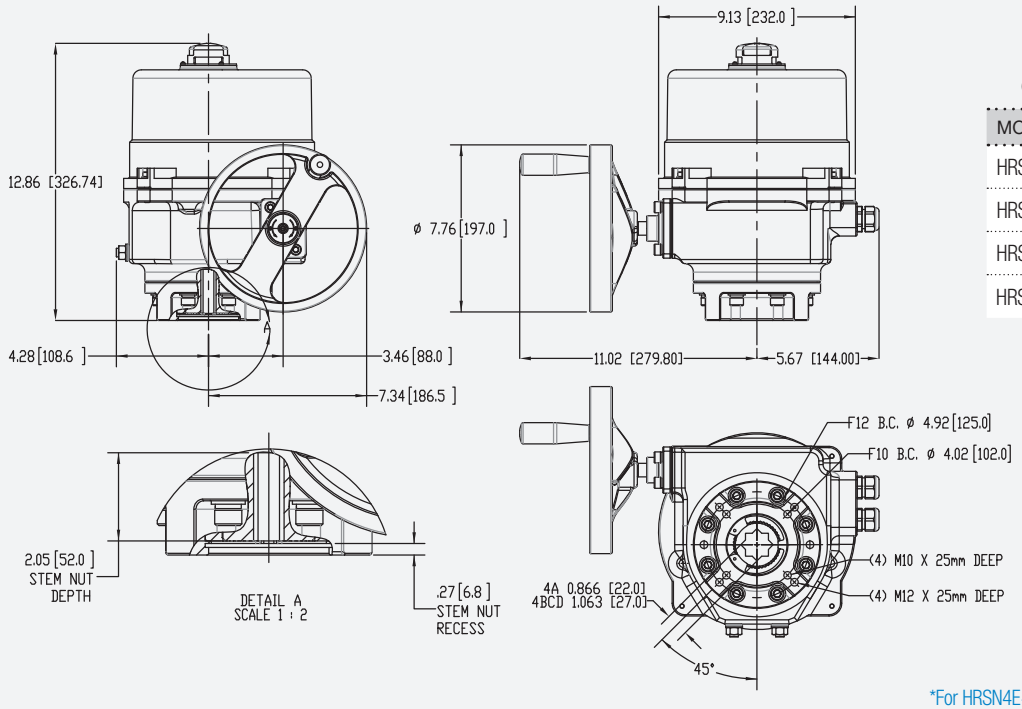

COVER REMOVAL CLEARANCE		WEIGHT
MODEL	IN/MM	LBS/KG
HRSN4A	8 / 200	53.9 / 24.5
HRSN4B	8 / 200	53.9 / 24.5
HRSN4C	8 / 200	53.9 / 24.5
HRSN4D	8 / 200	53.9 / 24.5

*For HRSN4E~4F, see page 29 for dimensions.

HRSN4A~4F Series 3-PHASE
Electronic Fail-Safe Actuator Battery Backup

FOR BALL AND BUTTERFLY VALVES UP TO 20"

ACTUATOR SPECIFICATIONS			HRSN4A	HRSN4B	HRSN4C	HRSN4D	HRSN4E	HRSN4F
Supply*	Torque Output (**in-lb** / Nm)		**3540** / 400	**5310** / 600	**7080** / 800	**8850** / 1000	**15,040** / 1700	**20,350** / 2300
220/3ph	Current Draw (Start / Run / LRA)		1.8A / 1.1A / 2.4A	1.8A / 1.1A / 2.4A	1.8A / 1.1A / 2.4A	2.8A / 1.1A / 2.1A	3.6A / 1.9A / 4.5A	3.6A / 1.9A / 4.5A
	Speed (90°) 60Hz / 50Hz, seconds		24 / 29	33 / 39	39 / 47	39 / 47	28 / 34	39 / 47
	Motor - 220V polyphase TENV		90W	90W	90W	120W	200W	200W
	On/Off / **Proportional**	Duty Cycle (IEC60034)	25% (S2-15 min) / **75% (S4-75%)**				25% (S2-15 min) / **50% (S4-50%)**	
		Motor Protection, Temp / Class	155°C / Class F					
		Motor Starts, per hour, Max	600					
380/3ph	Current Draw (Start / Run / LRA)		1.1A / 0.6A / 1.4A	1.1A / 0.6A / 1.4A	1.1A / 0.6A / 1.4A	1.6A / 0.8A / 1.9A	2.1A / 1.1A / 2.6A	2.1A / 1.1A / 2.6A
	Speed (90°) 60Hz / 50Hz, seconds		24 / 29	33 / 39	39 / 47	39 / 47	28 / 34	39 / 47
	Motor - 380V polyphase TENV		90W	90W	90W	120W	200W	200W
	On/Off / **Proportional**	Duty Cycle (IEC60034)	25% (S2-15 min) / **75% (S4-75%)**				25% (S2-15 min) / **50% (S4-50%)**	
		Motor Protection, Temp / Class	155°C / Class F					
		Motor Starts, per hour, Max	600					
480/3ph	Current Draw (Start / Run / LRA)		0.7A / 0.4A / 1.0A	0.7A / 0.4A / 1.0A	0.7A / 0.4A / 1.0A	0.9A / 0.5A / 1.1A	1.2A / 0.9A / 2.1A	1.2A / 0.9A / 2.1A
	Speed (90°) 60Hz / 50Hz, seconds		24 / 29	33 / 39	39 / 47	39 / 47	28 / 34	39 / 47
	Motor - 480V polyphase TENV		90W	90W	90W	120W	200W	200W
	On/Off / **Proportional**	Duty Cycle (IEC60034)	25% (S2-15 min) / **75% (S4-75%)**				25% (S2-15 min) / **50% (S4-50%)**	
		Motor Protection, Temp / Class	155°C / Class F					
		Motor Starts, per hour, Max	600					
575/3ph	**575/3 On/Off - Basic Only**** Current Draw (Start / Run / LRA)		0.4A / 0.3A / 0.8A	0.4A / 0.3A / 0.8A	0.4A / 0.3A / 0.8A	0.8A / 0.4A / 0.9A	1.0A / 0.7A / 1.9A	1.0A / 0.7A / 1.9A
	Speed (90°) 60Hz / 50Hz, seconds		24 / 29	33 / 39	39 / 47	39 / 47	28 / 34	39 / 47
	Motor - 575V polyphase TENV		90W	90W	90W	120W	200W	200W
	On/Off - Basic	Duty Cycle (IEC60034)	25% (S2-15 min)					
		Motor Protection, Temp / Class	155°C / Class F					
		Motor Starts, per hour, Max	600					
LCS	Environmental Rating		HRSN Series: NEMA 4/4X & IP67 (optional IP68)					
			HRSCK Series: NEMA 4/4X & IP65					
			HRSCB Series: NEMA 4/4X & IP67					
			HRSCL Series: NEMA 4/4X & IP67 (optional IP68)					
			HRSCD Series: NEMA 4/4X & IP67 (optional IP68)					
All	Electrical Entry (2)		3/4" EMT or Polyamide gland					
	Control (220/3 ~ 480/3)		On/Off, Proportional, in six levels of control and protection (some limited applications)					
	Control (575/3)		On/Off - Basic (follow On/Off - Std Duty performance data)					
	Auxiliary Switch - End of Travel		(2) Form A Volt-Free, Rated 10A @ 250vac					
	Ambient Operating Range		-22°F to +158°F (-30°C to +70°C)					
	Humidity Range		0-95% RH					
	Altitude Limit		9850 ft / 3000 m					

*See page 22 for actuator exploded view and parts list. See pages 26 & 28 for local control stations exploded views and parts lists.

Hayward is a registered trademark
of Hayward Industries, Inc.
© 2020 Hayward Industries, Inc.

USA: 1.888.429.4635 • Fax: 1.888.778.8410 • One Hayward Industrial Drive • Clemmons, NC 27012 • Email: hfcsales@hayward.com
Canada: 1.888.238.7665 • Fax: 1.905.829.3636 • 2880 Plymouth Drive • Oakville, ON L6H 5R4 • Email: hflowcanada@hayward.com
Visit us at: haywardflowcontrol.com

HRSN5 Series On/Off & Proportional Electric Actuators

FOR BALL AND BUTTERFLY VALVES UP TO 24”

3-PHASE

KEY FEATURES

- Units are equipped with two (2) volt-free Form A Auxiliary switches
- ISO5211 compliant mounting with double square female drive
- Visual position indicator
- NEMA 4X/IP67 compliant
- Two (2) EMT entry ports with sealed cable glands

OPTIONS

- Basic Interface
- Phase Correction
- Fault Out
- Local Control Stations
- Complete Integral Motor Control Stations
- Local Control Stations
- IP68 Submersion

TECHNICAL INFORMATION

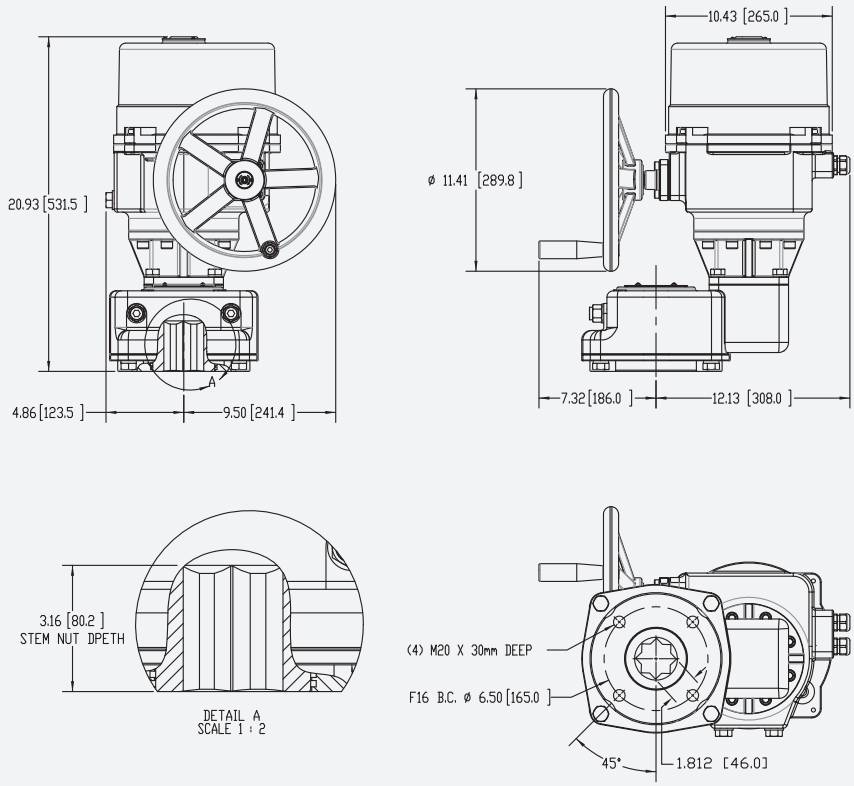

COVER REMOVAL CLEARANCE		WEIGHT
MODEL	IN/MM	LBS/KG
HRSN5A	9.84 / 250	174 / 79
HRSN5B	9.84 / 250	174 / 79

HRSN5 Series 3-PHASE
On/Off & Proportional Electric Actuators

FOR BALL AND BUTTERFLY VALVES UP TO 24"

ACTUATOR SPECIFICATIONS			HRSN5A	HRSN5B
Supply*	Torque Output (**in-lb** / Nm)		**30,970** / 3500	**44,250** / 5000
220/3ph	Current Draw (Start / Run / LRA)		3.6A / 1.9A / 4.5A	3.6A / 1.9A / 4.5A
	Speed (90°) 60Hz/50Hz, seconds		63 / 76	88 / 105
	Motor - 220V polyphase TENV		200W	200W
	On/Off / **Proportional**	Duty Cycle (IEC60034)	25% (S2-15 min) / **50% (S4-50%)**	
		Motor Protection, Temp / Class	155°C / Class F	
		Motor Starts, per hour, Max	600	
380/3ph	Current Draw (Start / Run / LRA)		2.1A / 1.1A / 2.6A	2.1A / 1.1A / 2.6A
	Speed (90°) 60Hz/50Hz, seconds		63 / 76	88 / 105
	Motor - 380V polyphase TENV		200W	200W
	On/Off / **Proportional**	Duty Cycle (IEC60034)	25% (S2-15 min) / **50% (S4-50%)**	
		Motor Protection, Temp / Class	155°C / Class F	
		Motor Starts, per hour, Max	600	
480/3ph	Current Draw (Start / Run / LRA)		1.2A / 0.9A / 2.1A	1.2A / 0.9A / 2.1A
	Speed (90°) 60Hz/50Hz, seconds		63 / 76	88 / 105
	Motor - 480V polyphase TENV		200W	200W
	On/Off / **Proportional**	Duty Cycle (IEC60034)	25% (S2-15 min) / **50% (S4-50%)**	
		Motor Protection, Temp / Class	155°C / Class F	
		Motor Starts, per hour, Max	600	
575/3ph	**575/3 On/Off - Basic Only**** Current Draw (Start / Run / LRA)		1.0A / 0.7A / 1.9A	1.0A / 0.7A / 1.9A
	Speed (90°) 60Hz/50Hz, seconds		63 / 76	88 / 105
	Motor - 575V polyphase TENV		200W	200W
	On/Off - Basic	Duty Cycle (IEC60034)	25% (S2-15 min)	
		Motor Protection, Temp / Class	155°C / Class F	
		Motor Starts, per hour, Max	600	
LCS	Environmental Rating		HRSN Series: NEMA 4/4X & IP67 (optional IP68)	
			HRCK Series: NEMA 4/4X & IP65	
			HRCB Series: NEMA 4/4X & IP67	
			HRCL Series: NEMA 4/4X & IP67 (optional IP68)	
			HRCD Series: NEMA 4/4X & IP67 (optional IP68)	
All (as noted)	Electrical Entry (2)		3/4" EMT or Polyamide Gland	
	Control (220/3 ~ 480/3)		On/Off, Proportional, in six levels of control and protection (some limited applications)	
	Control (575/3)		On/Off - Basic (follow On/Off - Std Duty performance data)	
	Auxiliary Switch - End of Travel		(2) Form A Volt-Free, Rated 10A @ 250vac	
	Ambient Operating Range		-22°F to +158°F (-30°C to +70°C)	
	Humidity Range		0-95% RH	
	Altitude Limit		9850 ft / 3000 m	

*See page 32 for actuator exploded view and parts list.

Hayward is a registered trademark of Hayward Industries, Inc.
© 2020 Hayward Industries, Inc.

USA: 1.888.429.4635 • Fax: 1.888.778.8410 • One Hayward Industrial Drive • Clemmons, NC 27012 • Email: hfcsales@hayward.com
Canada: 1.888.238.7665 • Fax: 1.905.829.3636 • 2880 Plymouth Drive • Oakville, ON L6H 5R4 • Email: hflowcanada@hayward.com
Visit us at: haywardflowcontrol.com

HAYWARD®

HRS Series Electronic Fail-Safe Battery Backup Transformer

SAFE

KEY FEATURES

- Availble for HRSN2A~4D Electronic Fail-Safe Units
- Key-lock Sealed Stainless Steel Transformer Enclosure
- 24VAC Output of 100VA, 250VA or 500VA
- Suitable for 120VAC or 230VAC Power Supply
- NEMA 4X/IP65 compliant

TECHNICAL INFORMATION

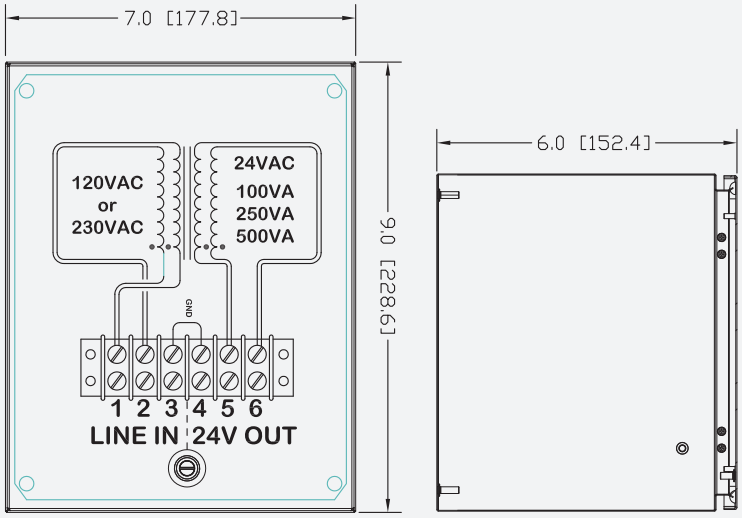

TRANSFORMER INPUT/OUTPUT			SIZE	WEIGHT
MODEL	LINE	POWER	IN/MM	LBS/KG
HRSBBC120-100	120VAC	100VA	9.0 W x 7.0 H x 6.0 D	12 / 5.5
HRSBBC120-250	120VAC	250VA		14 / 6.4
HRSBBC120-500	120VAC	500VA		20 / 9.1
HRSBBC230-100	230VAC	100VA	228.6 W x 177.8 H x 52.4 D	12 / 5.5
HRSBBC230-250	230VAC	250VA		14 / 6.4
HRSBBC230-500	230VAC	500VA		20 / 9.1

120VAC

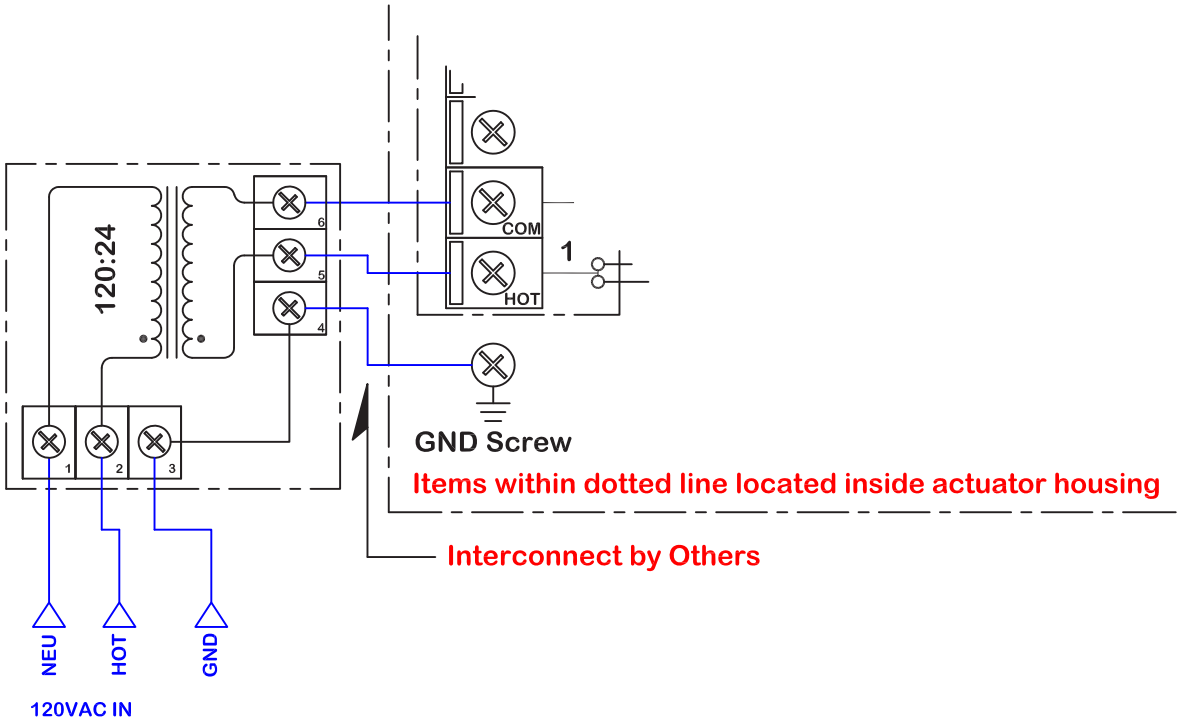

230VAC

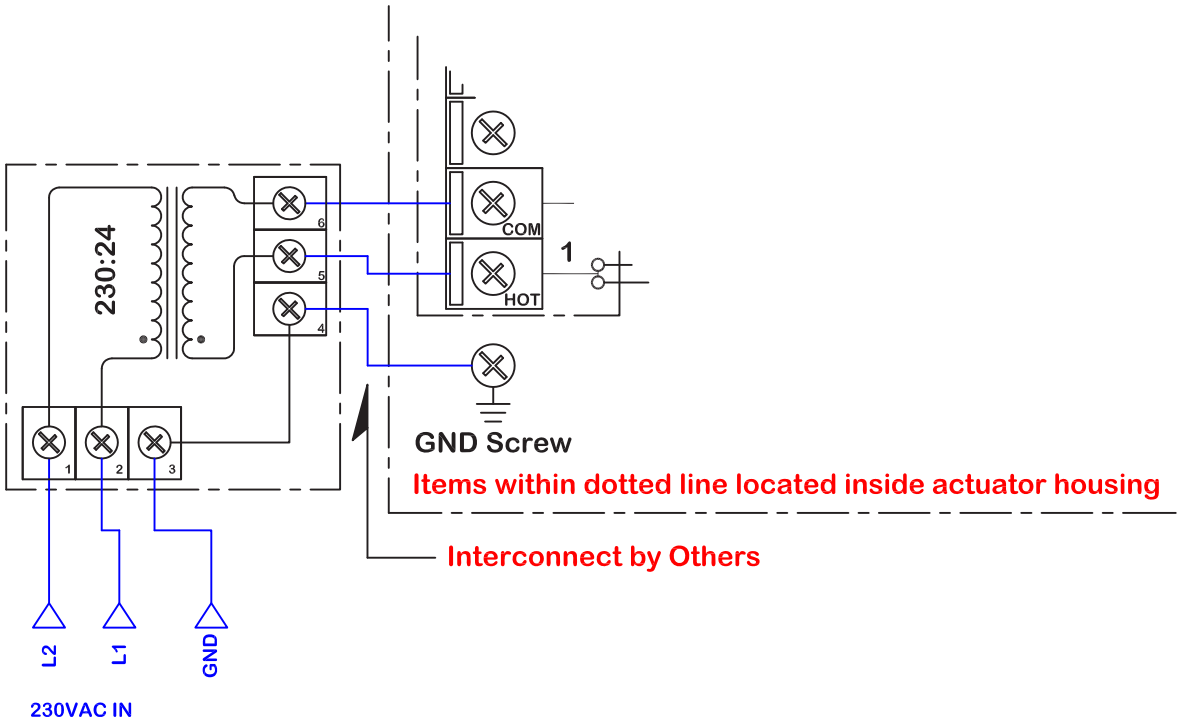

Hayward is a registered trademark of Hayward Industries, Inc.
© 2020 Hayward Industries, Inc.

USA: 1.888.429.4635 • Fax: 1.888.778.8410 • One Hayward Industrial Drive • Clemmons, NC 27012 • Email: hfcsales@hayward.com
Canada: 1.888.238.7665 • Fax: 1.905.829.3636 • 2880 Plymouth Drive • Oakville, ON L6H 5R4 • Email: hflowcanada@hayward.com
Visit us at: haywardflowcontrol.com

HZSN1 Series On/Off & Proportional Electric Actuators

KEY FEATURES

- Equipped with two 2 Volt-free Form A Auxiliary Switches Rated at up to 1A 250VAC (on/off models only)
- Proportional Models have 4-20mA or 2-10vdc Feedback Output Standard
- ISO5211 Compliant with an 11mm Double Square Female Drive
- Furnished with a 39" (1M) Cable to Facilitate Field Connections Outside the Compact Enclosure
- Low Profile Visual Position Indicator and Three Flush Mounted LEDs Allow At-a-glance Position Indication
- Manual Override Lever and 8mm Access Shaft at the Bottom of the Actuator Housing
- NEMA 4/4X/IP67 Compliant
- PG6 EMT Entry Port with Sealed Cable Gland

OPTIONS

- Power Supply Flexibility – 24 VAC/VDC, 120 VAC and 230 VAC
- On / Off or Proportional Control

TECHNICAL INFORMATION

ACTUATOR SPECIFICATIONS			HZSN1C
Supply	Torque Output (**in-lb** / Nm)		**266** / 30
24VAC - 24VDC	Current Draw (Start / Run / LRA)		1.3A / 0.7A / 2.0A
	Speed (90°) DC-60Hz / 50Hz, seconds		11 / 11
	Motor - 24V DC Perm Magnet 2 Pole Brush		10W
	On/Off / **Proportional**	Duty Cycle (IEC60034)	75% (S2-15 min) **/ 75% (S4-75%)**
		Motor Protection, Temp / Class	All - 130°C / Class B
		Motor Starts, per hour, Max	All - 600
120VAC	Current Draw (Start / Run / LRA)		1.3A / 0.7A / 2.0A
	Speed (90°) 60Hz / 50Hz, seconds		11 / 11
	Motor - 24V DC Perm Magnet 2 Pole Brush		10W
	On/Off / **Proportional**	Duty Cycle (IEC60034)	25% (S2-15 min) **/ 75% (S4-75%)**
		Motor Protection, Temp / Class	All - 130°C / Class B
		Motor Starts, per hour, Max	All - 600
230VAC	Current Draw (Start / Run / LRA)		1.3A / 0.7A / 2.0A
	Speed (90°) 60Hz / 50Hz, seconds		11 / 11
	Motor - 24V DC Perm Magnet 2 Pole Brush		10W
	On/Off / **Proportional**	Duty Cycle (IEC60034)	25% (S2-15 min) **/ 75% (S4-75%)**
		Motor Protection, Temp / Class	All - 130°C / Class B
		Motor Starts, per hour, Max	All - 600
All	Manual Override		Bottom 5mm Hex Shaft
	Environmental Rating		NEMA 4/4X & IP67
	Electrical Entry (1)		1M cable thru PG6 Polyamide gland
	Control		On/Off / Proportional
	Position Feedback - On/Off ONLY		(2) Form A Volt-Free, Rated 1A @ 250vac
	Position Feedback - Proportional ONLY		4-20mA / 2-10vdc
	Ambient Operating Range		-22°F to +158°F (-30°C to +70°C)
	Humidity Range		0-95% RH
	Altitude Limit		9850 ft / 3000 m

HZSN1 Series
On/Off & Proportional Electric Actuators

FOR BALL VALVES UP TO 2"

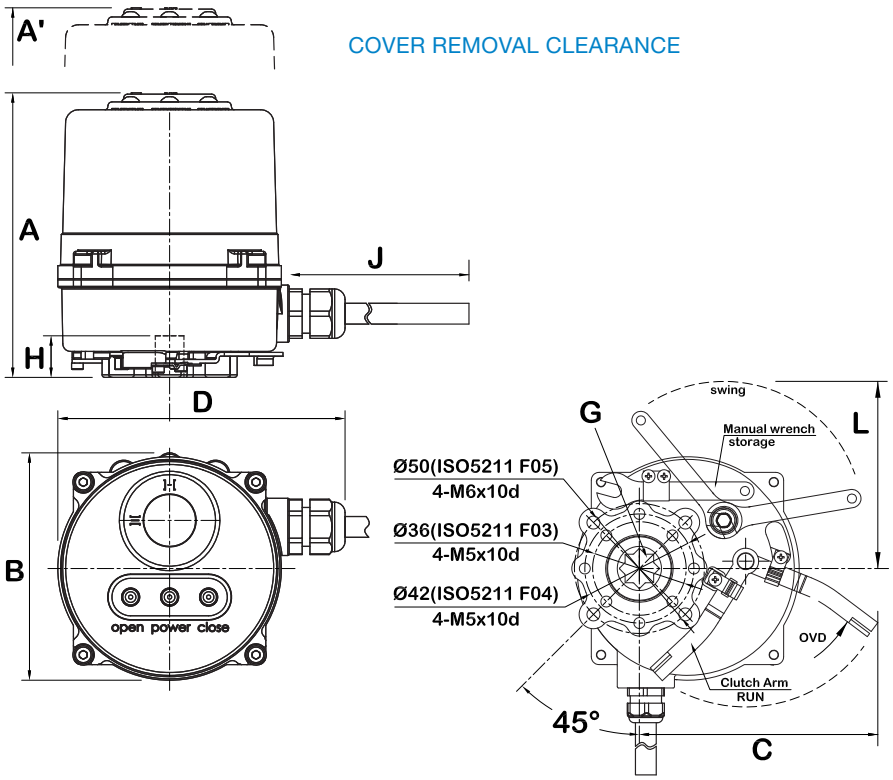

DIMENSIONS

MODEL	A in/mm	A' in/mm	B in/mm	C in/mm	D in/mm	G in/mm	H in/mm	J in/mm	L		WEIGHT lbs/kg
HZSN1C	4.33 / 110	2.95 / 75	3.44 / 87.5	4.49 / 114	4.37 / 111	.433 / 11	.63 / 16	39.4 / 1000	2.83 / 72	3.5 turns 90°	2.2 / 1.0

No Aux Switches on Modulating Models

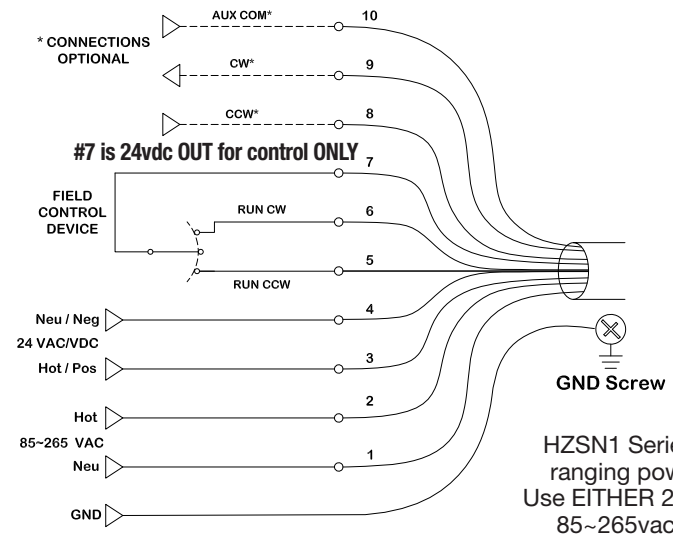

ON/OFF WIRING DIAGRAM

HZSN1 Series has auto ranging power supply. Use EITHER 24vac/vdc OR 85~265vac for on/off and proportional control

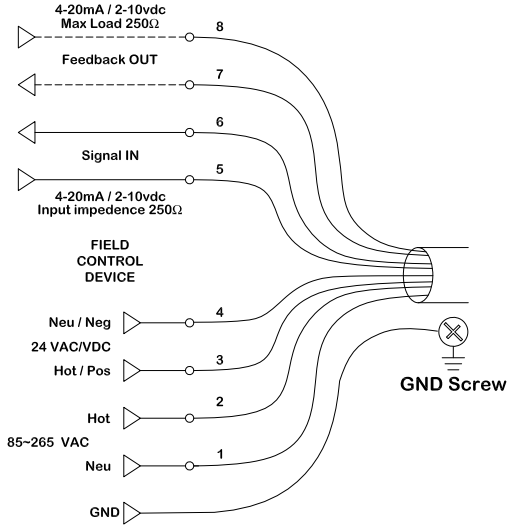

PROPORTIONAL WIRING DIAGRAM

Hayward is a registered trademark of Hayward Industries, Inc.
© 2020 Hayward Industries, Inc.

USA: 1.888.429.4635 • Fax: 1.888.778.8410 • One Hayward Industrial Drive • Clemmons, NC 27012 • Email: hfcsales@hayward.com
Canada: 1.888.238.7665 • Fax: 1.905.829.3636 • 2880 Plymouth Drive • Oakville, ON L6H 5R4 • Email: hflowcanada@hayward.com
Visit us at: haywardflowcontrol.com

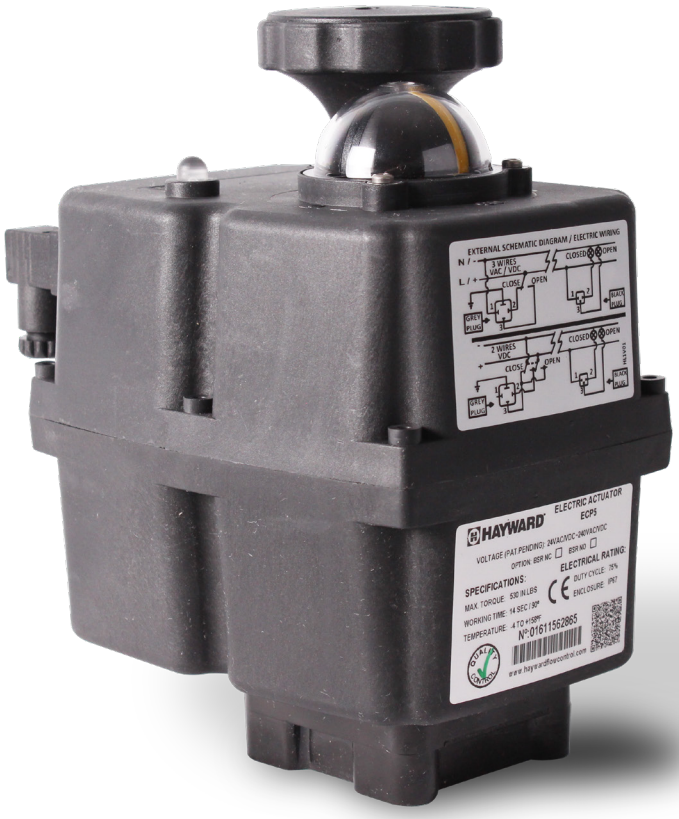

ECP Series Glass Filled Polypropylene Electric Actuators

SAFE

FOR BALL VALVES 1/2" - 6"

BUTTERFLY VALVES 2" - 6"

KEY FEATURES

- Ideal for Corrosive AtmosphereS and Environments
- Corrosion-Resistant GFPP Housing
- Auto Switching Power Supply
- LED Status Light
- Anti-Condensation Heater
- Manual Override
- Position Indicator
- 2 SPDT AUX Limit Switches
- Lightweight - Easy for Installation
- ISO5211 Mounting Base
- Stainless Steel Fasteners 303 SS
- 100% Factory Tested
- CE Mark
- Thermal Overload Protection

OPTIONS

- Digital Positioner 4-20mA or 2-10V
- Battery Fail Safe Kit

TECHNICAL INFORMATION

EXPLODED VIEW

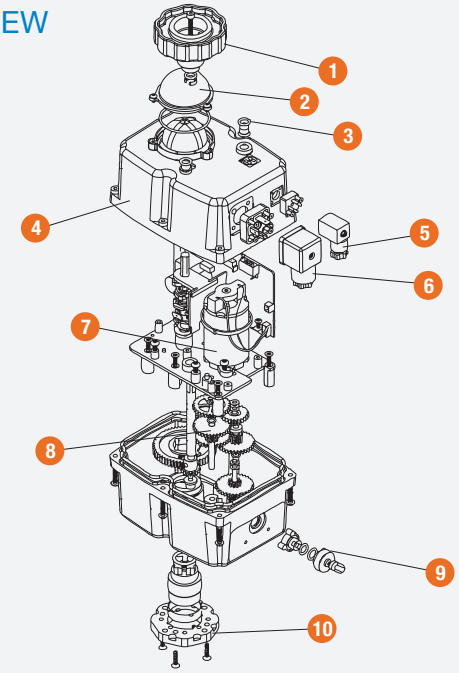

SPECIFICATIONS

OPERATION	1/4 Turn
DUTY RATING	75%
ENCLOSURE	NEMA 4 / 4X
PROTECTION	IP67
VOLTAGE	Single Phase 24~265VAC/VDC
HOUSING	GFPP (Glass Filled Polypropylene) per 314ASTM D4101 Cell Class 85580
OUTPUT SHAFT	303 Stainless Steel per ASTM A314

TECHNICAL INFORMATION, *CONTINUED*

PARTS LIST

1. Manual Override
2. Position Indicator Assembly
3. LED Indicator
4. Housing
5. Auxiliary Switch DIN Connector
6. Power DIN Connector
7. DC Drive Motor
8. Hardened Steel Gear Set
9. Declutch Lever
10. ISO5211 Mount Plate

DIMENSIONS

MODEL	A in / mm	B in / mm	C in / mm	ISO PATTERN
ECP3	6.96 / 177	6.73 / 171	4.33 / 110	F05 X 14 mm
ECP5	6.96 / 177	7.72 / 196	4.33 / 110	F07 X 14 mm
ECP8	6.96 / 177	7.72 / 196	4.33 / 110	F07 X 14 mm

ACTUATOR SPECIFICATIONS

	ECP3	ECP5	ECP8
Torque Output (in / lbs / Nm)	359 / 40	530 / 60	796 / 90
Enclosure Material	Glass Filled Polypropylene		
Output Shaft	303 Stainless Steel		
Cycle Time	11 sec.	14 sec.	30 sec.
Operatiing Temperature	4° F to 160° F / 16° C to 71°C		
Weight (lbs / kg)	1.90 / 0.86	2.40 / 1.09	3.00 / 1.36

ACTUATOR OPTIONS
FACTORY INSTALLED

Battery Fail Safe Kit

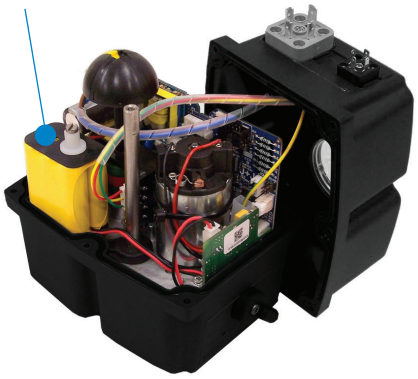

The BB Battery Backup option, when properly installed in the ECP Series electric actuators, uses internal battery power to drive the actuator and linked valve or damper to a Fail CW or Fail CCW position in case of a power failure.

Digital Positioner 4-20mA or 2-10V

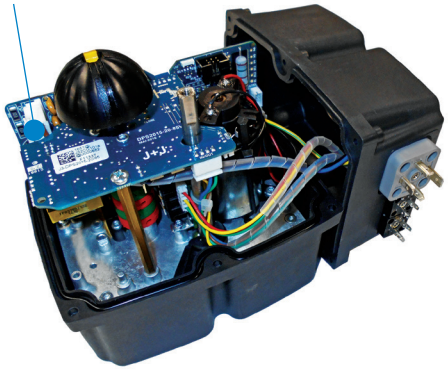

Proportional Control (PC) is an interface for the ECP Series electric actuators that effectively turns the actuator into a servo controlled valve positioner.

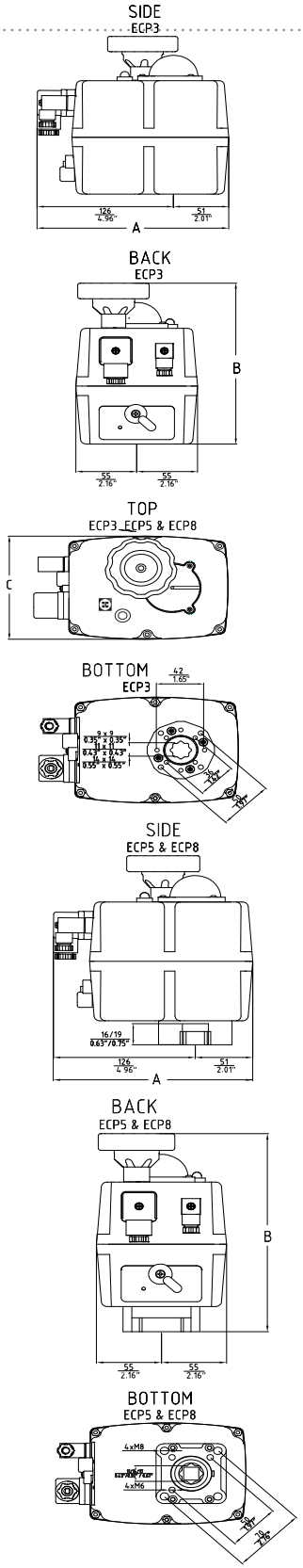

Hayward is a registered trademark of Hayward Industries, Inc.
© 2020 Hayward Industries, Inc.

EAU Series Electric Actuators

FOR BALL VALVES UP TO 2"

KEY FEATURES

- UL/CSA Listed Motor
- Thermoplastic NEMA 4 / 4X Enclosure
- 2.5 Second, 90° Cycle Time, 5.0 sec 180° Cycle Time
- Permanently Lubricated Gear Train
- Motor Brake
- 90 or 180° Operation
- Unidirectional, Not Reversing
- Terminal Block Connections
- Standard 120 VAC
- End of Travel Dry Contact Limit Switch
- Thermal Overload Protection
- Lightweight, Compact and Inexpensive

OPTIONS

- Voltage Options of 12, 24 or 220 VAC and 12 or 24 VDC

MATERIALS

- PP per ASTM D4101

TECHNICAL INFORMATION

SPECIFICATIONS

HOUSING	GFPP
OPERATION	Unidirectional
CONDUIT SIZE	1/2"
DUTY CYCLE	25%
CYCLE TIMES	2-1/2 Seconds, 90º Rotation; 5 Seconds, 180º Rotation
ENCLOSURE	NEMA 4 / 4X
VOLTAGE	120 VAC
THERMAL OVERLOAD PROTECTION MECHANICAL BRAKE MOTOR	UL Listed
AUXILIARY LIMIT SWITCHES	Rated 10A @ 230 VAC Resistive

TECHNICAL INFORMATION, *CONTINUED*

DIMENSIONS

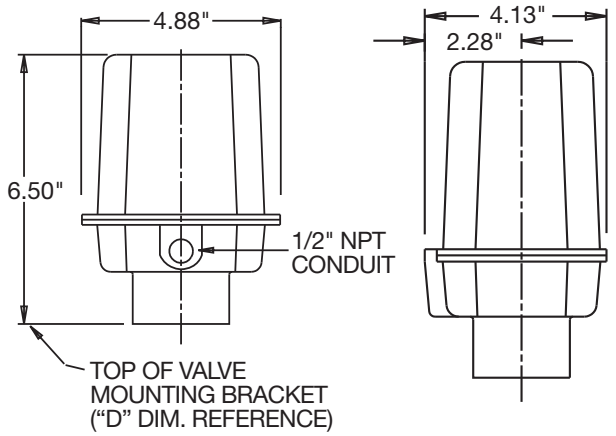

Dimensions are subject to change without notice – consult factory for installation information

WIRING DIAGRAM

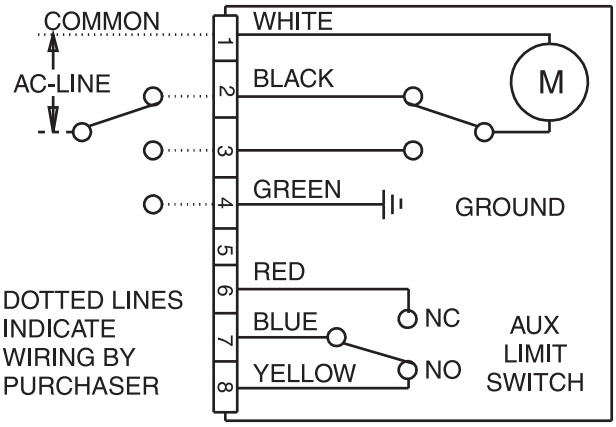

ACTUATOR SPECIFICATIONS

MODEL	EAU
Torque Output (in-lbs)	120
Standard Voltage	120 VAC
Duty Cycle	25%
Thermal Overload	Standard
Cycle Time (in seconds)*	2.5 / 5.0
Auxiliary Switch Limit Rating	SPDT 10A Resistive @ 230 VAC
Conduit Entry	1/2" NPT
Enclosure	NEMA 4 / 4X
Enclosure Material	Polypropylene
Max Current Amps @ 120 VAC	1.8
Weight (lbs / kg)	6.2 / 2.7

* EAU28 = 180° (5.0 sec) EAU29 = 90° (2.5 sec)

VALVE SELECTION CHART

SIZE in / DN	TB / TBH / TN / LA90 SERIES BALL VALVES	TW / LA SERIES BALL VALVES
1/2 – 2 / 15 – 50	EAU29 (90º)	EAU28 (180º)

* Actuator size selections based on clean water at 70ºF

Hayward is a registered trademark
of Hayward Industries, Inc.
© 2020 Hayward Industries, Inc.

USA: 1.888.429.4635 • Fax: 1.888.778.8410 • One Hayward Industrial Drive • Clemmons, NC 27012 • Email: hfcsales@hayward.com
Canada: 1.888.238.7665 • Fax: 1.905.829.3636 • 2880 Plymouth Drive • Oakville, ON L6H 5R4 • Email: hflowcanada@hayward.com
Visit us at: haywardflowcontrol.com

EAU1 Series Electric Actuators

FOR BALL VALVES UP TO 2"

KEY FEATURES

- ISO5211 Compliant F05 Base
- UL/CSA Listed Motor
- Thermoplastic NEMA 4 / 4X Enclosure
- 2.5 Second, 90° Cycle Time
- Permanently Lubricated Gear Train
- Motor Brake
- 90° Operation
- Unidirectional, Not Reversing
- Terminal Block Connections
- Standard 120 VAC
- End of Travel Dry Contact Limit Switch
- Thermal Overload Protection
- Lightweight, Compact and Inexpensive

OPTIONS

- Voltage Options of 12, 24 or 230 VAC and 12, 24 VDC

TECHNICAL INFORMATION

MODEL	EAU129	EAU12912A	EAU12912D	EAU12924A	EAU12924D	EAU129220A
Drive Cycle	90°	90°	90°	90°	90°	90°
Voltage	120V	12VAC	12VDC	24VAC	24VDC	220V
FLA/LRA	1.8A	4.8A	4.8A	2.4A	2.4A	0.9A
Cycle Time	2.5 sec	2.5 sec	2.5 sec	7.5 sec	2.5 sec	2.5 sec
Duty Cycle	25%	25%	25%	25%	25%	25%
Rated Torque	120"lbs (13.5Nm)					
Mount	ISO5211 F05 x 0.316 Male Drive, Offset 45°					
Operating Temp	32°F - 130°F (0°C - 55°C)					
Housing	GFPP					
Enclosure	NEMA 4/4X					
Operation	Unidirectional - CCW					
Conduit Size	1/2" EMT x 1 Port					
Auxiliary Switch	10A 230vac (Resistive) SPDT x 1					
Weight	6.2lb / 2.7kg					
Thermal Protection	UL Listed Motor Thermal Protection, Mechanical brake motor					

TECHNICAL INFORMATION, *CONTINUED*

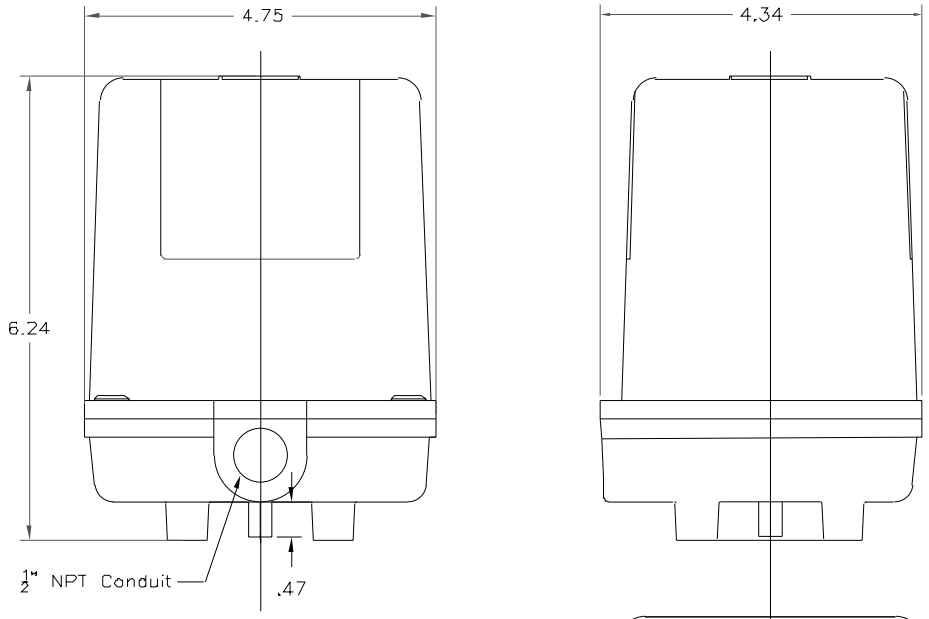

WIRING DIAGRAM

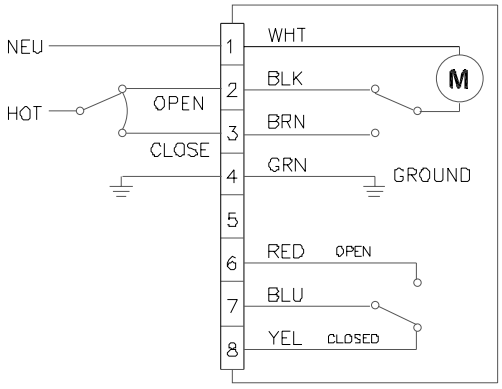

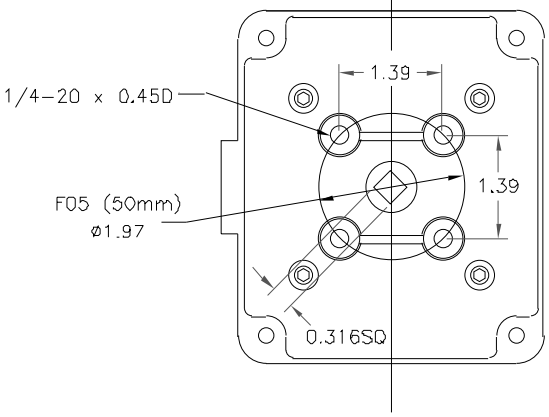

VALVE SELECTION CHART

SIZE in / DN	TB / TBH
1/2 – 2 / 15 – 50	EAU129 (90º)

* Actuator size selections based on clean water at 70ºF

Hayward is a registered trademark of Hayward Industries, Inc.
© 2020 Hayward Industries, Inc.

USA: 1.888.429.4635 • Fax: 1.888.778.8410 • One Hayward Industrial Drive • Clemmons, NC 27012 • Email: hfcsales@hayward.com
Canada: 1.888.238.7665 • Fax: 1.905.829.3636 • 2880 Plymouth Drive • Oakville, ON L6H 5R4 • Email: hflowcanada@hayward.com
Visit us at: haywardflowcontrol.com

PMD Series Double Acting Pneumatic Actuators

FOR BALL VALVES UP TO 2"
FOR BUTTERFLY VALVES UP TO 3"

KEY FEATURES

- Double Acting Air-to-Open and Close
- Corrosion-Resistant Thermoplastic Housing
- Permanently Lubricated Rack and Pinion
- Manual Override
- Two-Piston Rack and Pinion Design
- Namur-Style Top-Works Mounting
- Namur-Style Solenoid Mounting
- Position Indicator
- Lightweight
- ISO5211 Mounting Base

OPTIONS

- Solenoid Valves with Optional Voltages
- Declutchable Manual Override
- Auxiliary Limit Switch
- Cycle Speed Control
- Positioner

TECHNICAL INFORMATION

EXPLODED VIEW

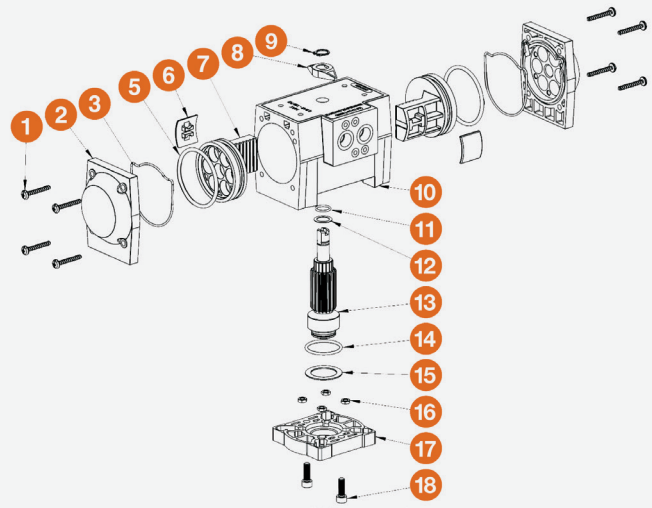

SPECIFICATIONS

HOUSING	Polyamide
OUTPUT SHAFT	Carbon Steel, Nickel Plated
MINIMUM AIR PRESSURE	80 PSI
MAXIMUM AIR PRESSURE	120 PSI
SEALS	Nitrile
CYCLE TIME	Half Second, Typical
AIR PORT CONNECTIONS	1/4" NPT

PMD Series
Double Acting Pneumatic Actuators

FOR BALL VALVES UP TO 2"
FOR BUTTERFLY VALVES UP TO 3"

TECHNICAL INFORMATION, *CONTINUED*

DIMENSIONS

MODEL	øA in / mm	B in / mm	C in / mm	L in / mm	P in / mm	R in / mm
PMD15	.551 / 14 ISO F05	1/4-20 x .512 UNC-ISO F05	ø1.969 / 50 ISO F05	6.299 / 160	4.370 / 111	3.386 / 86

Dimensions are subject to change without notice – consult factory for installation information

ACTUATOR OPERATING SYSTEMS

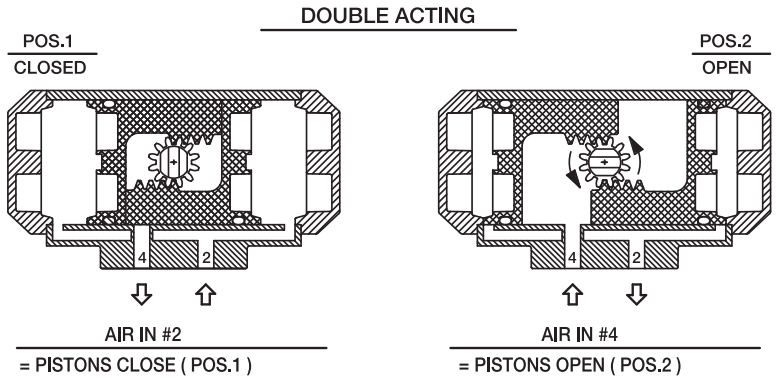

ACTUATOR SPECIFICATIONS

MODEL	PMD15
Torque Output (in-lbs) @ 80 PSI	275
Enclosure Material	Polyamide
Output Shaft	Carbon Steel, Nickel Plated
Air Port Connections	1/4" NPT
Air Consumption (cu. in.)	22.0
Air Transfer	Internal
Stroke Time (seconds)	.5
Cycle Time	1/2 Second
Minimum Air Pressure	80 PSI
Maximum Air Pressure	120 PSI
Operation	Rack and Pinion
Weight (lbs / kg)	2.624 / 1.2

VALVE SELECTION CHART

SIZE* in / DN	TB / TBH / CV / CVH SERIES BALL VALVES	TW/LA SERIES BALL VALVES	BYV SERIES BUTTERFLY VALVES
1/2 - 2 / 15 - 50	PMD15	PMD15	N/A
2 - 3	–	–	PMD15

* Actuator selection based on clean water @ 70°F

TOP

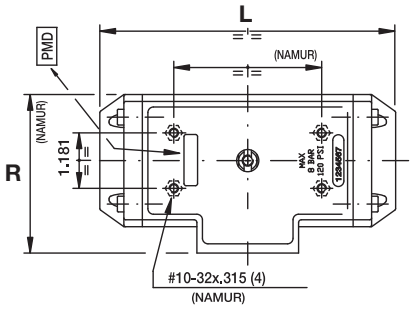

FRONT

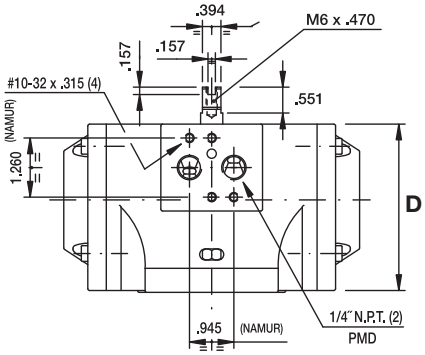

SIDE

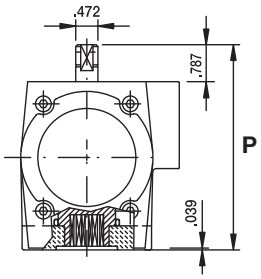

BOTTOM

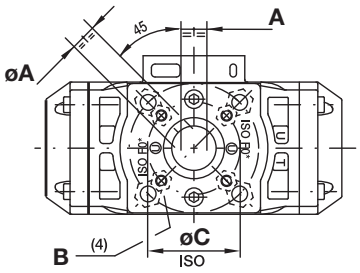

Hayward is a registered trademark of Hayward Industries, Inc.
© 2020 Hayward Industries, Inc.

USA: 1.888.429.4635 • Fax: 1.888.778.8410 • One Hayward Industrial Drive • Clemmons, NC 27012 • Email: hfcsales@hayward.com
Canada: 1.888.238.7665 • Fax: 1.905.829.3636 • 2880 Plymouth Drive • Oakville, ON L6H 5R4 • Email: hflowcanada@hayward.com
Visit us at: haywardflowcontrol.com

PMS Series Spring Return Pneumatic Actuators

FOR BALL VALVES UP TO 2"

KEY FEATURES

- Air to Spring Fail-Safe Operation
- Corrosion-Resistant Thermoplastic Housing
- Permanently Lubricated Rack and Pinion
- Manual Override
- Two-Piston Rack and Pinion Design
- Namur-Style Top-Works Mounting
- Namur-Style Solenoid Mounting
- Position Indicator
- Lightweight
- ISO5211 Mounting Base

OPTIONS

- Solenoid Valves with Optional Voltages
- Declutchable Manual Override
- Auxiliary Limit Switch
- Cycle Speed Control
- Positioner

TECHNICAL INFORMATION

EXPLODED VIEW

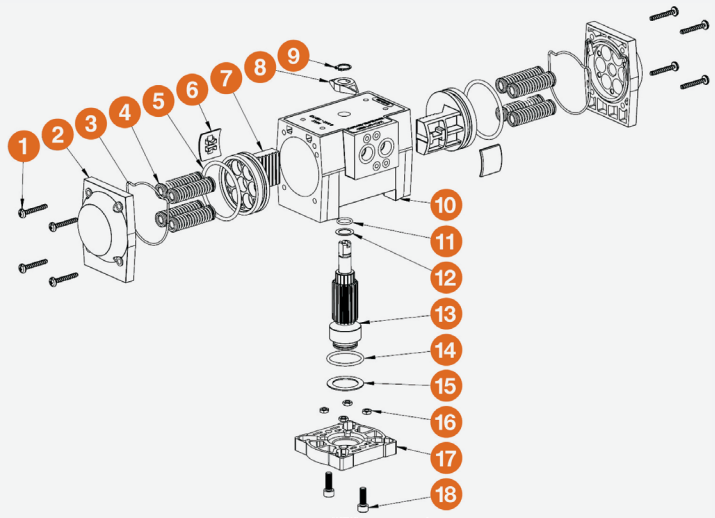

SPECIFICATIONS

HOUSING	Polyamide
OUTPUT SHAFT	Carbon Steel, Nickel Plated
MINIMUM AIR PRESSURE	80 PSI
MAXIMUM AIR PRESSURE	120 PSI
SEALS	Nitrile
CYCLE TIME	Half Second, Typical
AIR PORT CONNECTIONS	1/4" NPT

TECHNICAL INFORMATION, *CONTINUED*

DIMENSIONS

MODEL	øA in / mm	B in / mm	C in / mm	L in / mm	P in / mm	R in / mm
PMS15	.551 / 14 ISO F05	1/4-20 x .512 UNC-ISO F05	ø1.969 / 50 ISO F05	6.299 / 160	4.370 / 111	3.386 / 86

Dimensions are subject to change without notice – consult factory for installation information.
Standard is spring CW (Fail Closed). Add "F0" suffix to model number for spring CCW (Fail Open).

ACTUATOR OPERATING SYSTEMS

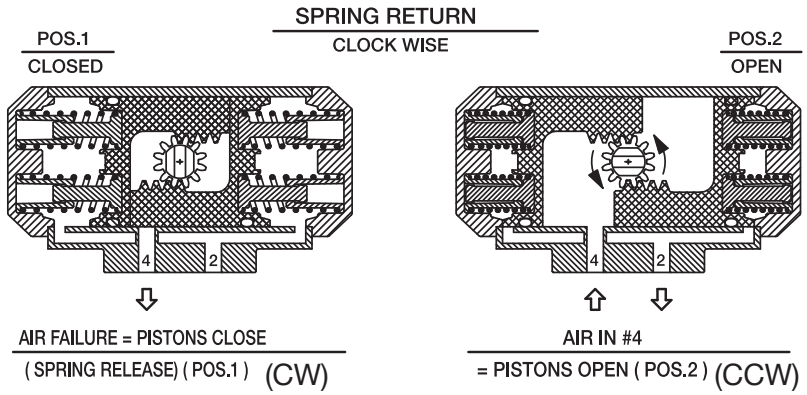

ACTUATOR SPECIFICATIONS

MODEL	PMS15
Torque Output (in-lbs) @ 80 PSI	168 / 125
Spring Stroke (Start/End)	150 / 107
Enclosure Material	Polyamide
Output Shaft	Carbon Steel, Nickel Plated
Air Port Connections	1/4" NPT
Air Consumption (cu. in.)	10.8
Air Transfer	Internal
Stroke Time (seconds)	.5
Cycle Time	1/2 Second
Minimum Air Pressure	80 PSI
Maximum Air Pressure	120 PSI
Operation	Rack and Pinion
Weight (lbs / kg)	3.1 / 1.4

VALVE SELECTION CHART

SIZE* in/DN	TB / TBH / CV / CVH SERIES BALL VALVES	TW/LA SERIES BALL VALVES
1/2 – 2 / 15 – 50	PMS15	PMS15

* Actuator selection based on clean water @ 70°F

TOP

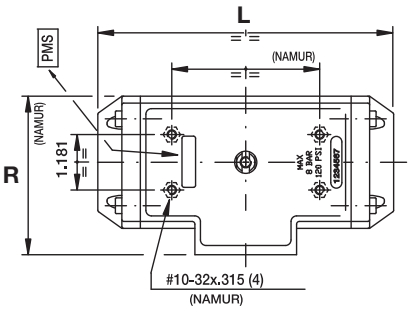

FRONT

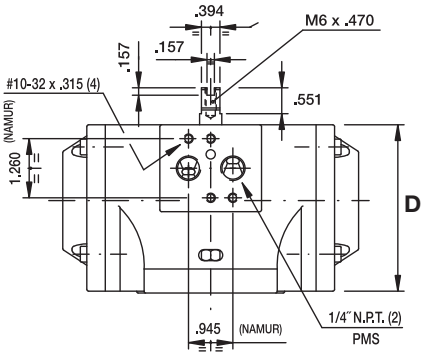

SIDE

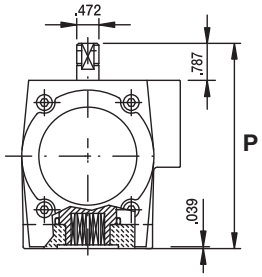

BOTTOM

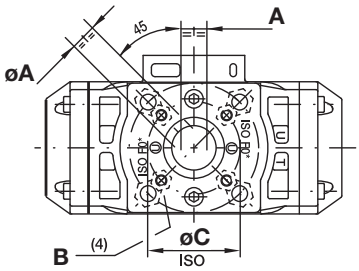

Hayward is a registered trademark of Hayward Industries, Inc.
© 2020 Hayward Industries, Inc.

USA: 1.888.429.4635 • Fax: 1.888.778.8410 • One Hayward Industrial Drive • Clemmons, NC 27012 • Email: hfcsales@hayward.com
Canada: 1.888.238.7665 • Fax: 1.905.829.3636 • 2880 Plymouth Drive • Oakville, ON L6H 5R4 • Email: hflowcanada@hayward.com
Visit us at: haywardflowcontrol.com

PMD4 Series Double Acting Pneumatic Actuators

FOR BALL VALVES UP TO 6"
FOR BUTTERFLY VALVES UP TO 6"

KEY FEATURES

- Double Acting Air-to-Open and Close
- Corrosion-Resistant GFPP Housing
- Ideal for Corrosive Atmosphere and Environments
- Anodized Aluminum Two-Piston Rack and 303 Stainless Steel Pinion
- Manual Override
- Position Indicator
- Permanently Lubricated Rack and Pinion
- Lightweight – Easy for Installation
- Namur-Style Top-Works Mounting
- Namur-Style Solenoid Mounting
- ISO5211 Mounting Base
- Stainless Steel Fasteners
- Alternative Operating Media for 80 PSI to 120 PSI

OPTIONS

- Solenoid Valves with Optional Voltages
- Declutchable Manual Override
- Auxiliary Limit Switch
- Cycle Speed Control
- Positioner

TECHNICAL INFORMATION

EXPLODED VIEW

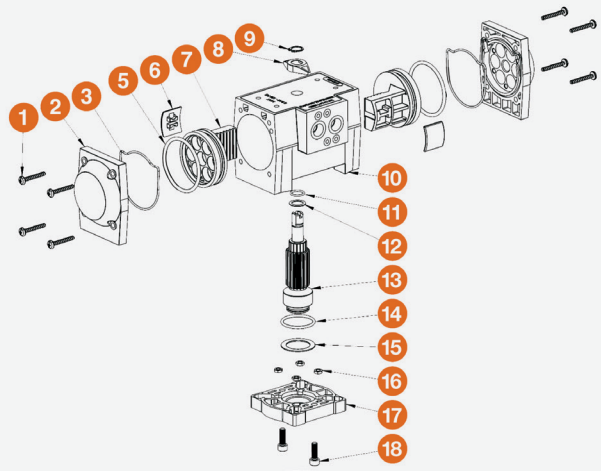

SPECIFICATIONS

HOUSING	GFPP per ASTM D4101 Cell Class 85580
OUTPUT SHAFT	03 Stainless Steel per ASTM A314
SEALS	Nitrile
MINIMUM AIR PRESSURE	80 PSI
MAXIMUM AIR PRESSURE	120 PSI
CYCLE TIME	Half Second, Typical
AIR PORT CONNECTIONS	1/4" NPT
NAMUR MOUNTING	VDI / VDE / 3845
OPERATING TEMPERATURE RANGE	-4°F to 176°F

TECHNICAL INFORMATION, *CONTINUED*

DIMENSIONS

MODEL	A in / mm	B in / mm	E in / mm	H in / mm	J in / mm	K in / mm	L in / mm	FLANGE STANDARD (dim M)	WEIGHT (lbs)
PMD415	3.54 / 90	4.37 / 111	0.47 / 12	1.30 / 33	3.39 / 86	0.55 / 14	6.30 / 160	F05	2.3
PMD419	4.39 / 112	5.22 / 133	0.47 / 12	1.30 / 33	3.98 / 101	0.67 / 17	6.89 / 175	F07	3.6

ACTUATOR OPERATING SYSTEMS

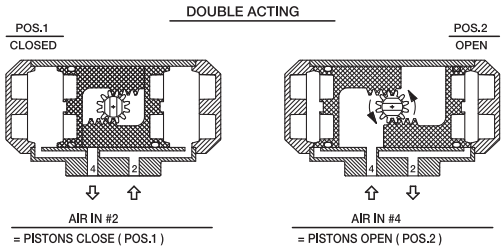

ACTUATOR SPECIFICATIONS

	PMD415	PMD419
Torque Output (in. /lb.) @ 80psi	275	500
Spring Stroke (Start/End)	NA	NA
Enclosure Material	Glass Filled Polypropylene	
Output Shaft	303 Stainless Steel	
Air Port Connections	1/4" NPT	
Air Consumption (cu. in.)	22	40.6
Air Transfer	Internal	
Stroke Time (seconds)	0.5	
Cycle Time	1/2 second	
Minimum Air Pressure	80psi	
Maximum Air Pressure	120psi	
Operation	Rack and Pinion	
Weight (lb / kg)	2.25 / 1.02	3.55 / 1.61

VALVE SELECTION CHART

SIZE* in / DN	TB / TBH / CV / CVH SERIES BALL VALVES	TW/LA SERIES BALL VALVES	BYV SERIES BUTTERFLY VALVES
1/2 / 15	PMD415	PMD415	N/A
3/4 / 20	PMD415	PMD415	N/A
1 / 25	PMD415	PMD415	N/A
1-1/4 / 32	PMD415	PMD415	N/A
1-1/2 / 40	PMD415	PMD415	N/A
2 / 50	PMD415	PMD415	PMD415 / PMD419
2-1/2 / 65	PMD419	PMD419	PMD415 / PMD419
3 / 80	PMD419	PMD419	PMD415 / PMD419
4 / 100	PMD419	PMD419	PMD419
6 / 150	PMD419	PMD419	N/A

TOP

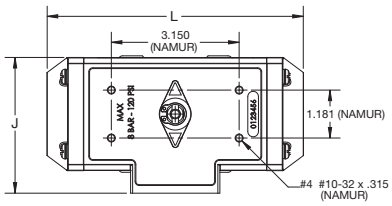

FRONT

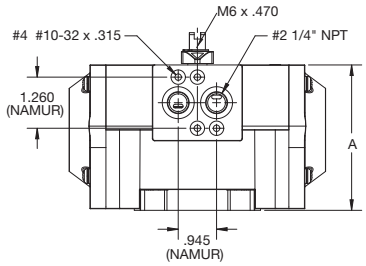

SIDE

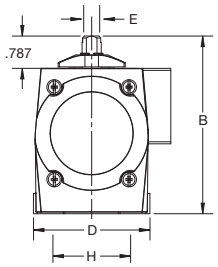

BOTTOM

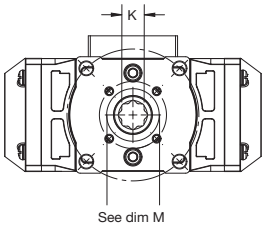

Hayward is a registered trademark of Hayward Industries, Inc.
© 2020 Hayward Industries, Inc.

USA: 1.888.429.4635 • Fax: 1.888.778.8410 • One Hayward Industrial Drive • Clemmons, NC 27012 • Email: hfcsales@hayward.com
Canada: 1.888.238.7665 • Fax: 1.905.829.3636 • 2880 Plymouth Drive • Oakville, ON L6H 5R4 • Email: hflowcanada@hayward.com
Visit us at: haywardflowcontrol.com

PMS4 Series Spring Return Pneumatic Actuators

FOR BALL VALVES UP TO 6"

FOR BUTTERFLY VALVES UP TO 2"

KEY FEATURES

- Air to Spring Fail Safe Operation
- Corrosion-Resistant GFPP Housing
- Ideal for Corrosive Atmosphere and Environments
- Anodized Aluminum Two-Piston Rack and 303 Stainless Steel Pinion
- Position Indicator
- Permanently Lubricated Rack and Pinion
- Lightweight – Easy for Installation
- Namur-Style Top-Works Mounting
- Namur-Style Solenoid Mounting
- ISO5211 Mounting Base
- Stainless Steel Fasteners
- Alternative Operating Media for 40 PSI to 120 PSI

OPTIONS

- Solenoid Valves with Optional Voltages
- Declutchable Manual Override
- Auxiliary Limit Switch
- Cycle Speed Control
- Positioner

TECHNICAL INFORMATION

EXPLODED VIEW

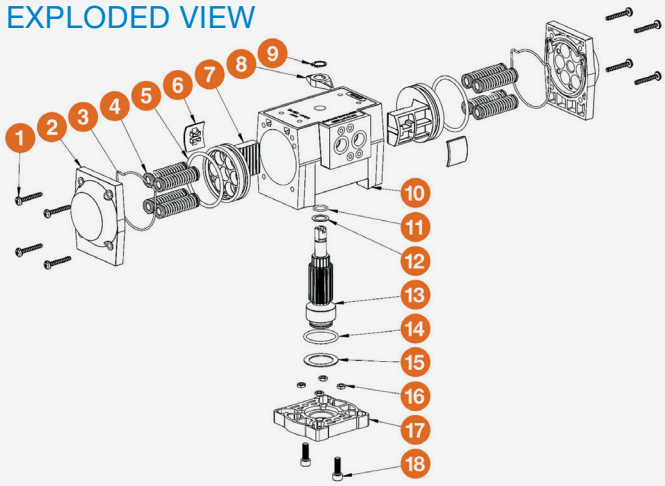

SPECIFICATIONS

HOUSING	GFPP per ASTM D4101 Cell Class 85580
OUTPUT SHAFT	03 Stainless Steel per ASTM A314
SEALS	Nitrile
MINIMUM AIR PRESSURE	80 PSI
MAXIMUM AIR PRESSURE	120 PSI
CYCLE TIME	Half Second, Typical
AIR PORT CONNECTIONS	1/4" NPT
NAMUR MOUNTING	VDI/VDE 3845
OPERATING TEMPERATURE RANGE	-4°F to 176°F

TECHNICAL INFORMATION, *CONTINUED*

DIMENSIONS

MODEL	A in / mm	B in / mm	E in / mm	H in / mm	J in / mm	K in / mm	L in / mm	FLANGE STANDARD (dim M)	WEIGHT (lbs)
PMS415	3.54 / 90	4.37 / 111	0.47 / 12	1.30 / 33	3.39 / 86	0.55 / 14	6.30 / 160	F05	3.1
PMS420	4.39 / 112	5.22 / 133	0.47 / 12	1.30 / 33	3.98 / 101	0.67 / 17	6.89 / 175	F07	5.2

Standard is spring CW (Fail Closed). Add "F0" suffix to model number for spring CCW (Fail Open).

ACTUATOR OPERATING SYSTEMS

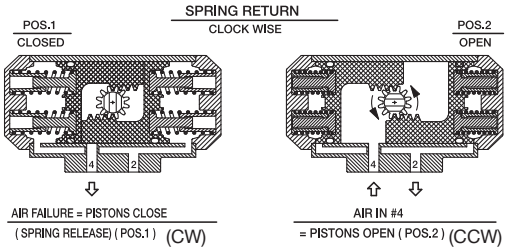

ACTUATOR SPECIFICATIONS

	PMS415	PMS420
Torque Output (in. /lb.) @ 80psi	168 / 125	270 / 193
Spring Stroke (Start/End)	150 / 107	307 / 230
Enclosure Material	Glass Filled Polypropylene	
Spring Set	4+4	5+5
Air Port Connections	1/4" NPT	
Air Consumption (cu. in.)	10.8	17.5
Air Transfer	Internal	
Stroke Time (seconds)	0.5 second	
Cycle Time	0.5 second	
Minimum Air Pressure	80psi	
Maximum Air Pressure	120psi	
Operation	Rack and Pinion, Spring Return	
Weight (lb / kg)	3.1 / 1.4	5.2 / 2.4

VALVE SELECTION CHART

SIZE* in / DN	TB / TBH / CV / CVH SERIES BALL VALVES	TW/LA SERIES BALL VALVES	BYV SERIES BUTTERFLY VALVES
1/2 / 15	PMS415	PMS415	N/A
3/4 / 20	PMS415	PMS415	N/A
1 / 25	PMS415	PMS415	N/A
1-1/4 / 32	PMS415	PMS415	N/A
1-1/2 / 40	PMS415	PMS415	N/A
2 / 50	PMS415	PMS415	PMS420
2-1/2 / 65	PMS420	PMS420	PMS420
3 / 80	PMS420	PMS420	PMS420
4 / 100	PMS420	PMS420	N/A
6 / 150	PMS420	PMS420	N/A

TOP

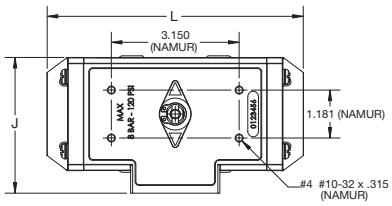

FRONT

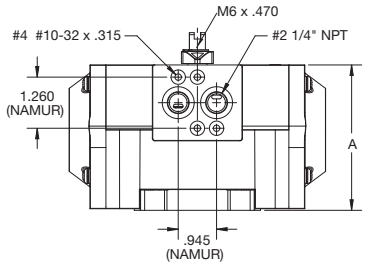

SIDE

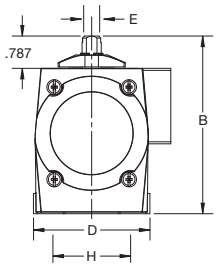

BOTTOM

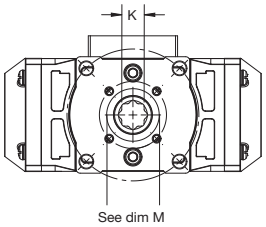

Hayward is a registered trademark of Hayward Industries, Inc.
© 2020 Hayward Industries, Inc.

USA: 1.888.429.4635 • Fax: 1.888.778.8410 • One Hayward Industrial Drive • Clemmons, NC 27012 • Email: hfcsales@hayward.com
Canada: 1.888.238.7665 • Fax: 1.905.829.3636 • 2880 Plymouth Drive • Oakville, ON L6H 5R4 • Email: hflowcanada@hayward.com
Visit us at: haywardflowcontrol.com

PMD6 Series Double Acting Pneumatic Actuators

FOR BALL VALVES UP TO 6"
FOR BUTTERFLY VALVES UP TO 24"

KEY FEATURES

- Double Acting Air-to-Open and Close
- Industrial Aluminium Housing
- Ideal for Heavy Duty Applications
- Anodized Aluminum Two-Piston Rack and 303 Stainless Steel Pinion
- Manual Override
- Position Indicator
- Adjustable End Stops
- Lightweight – Easy for Installation
- Namur-Style Top-Works Mounting
- Namur-Style Solenoid Mounting
- ISO5211 Mounting Base
- Stainless Steel Fasteners
- Alternative Operating Media for 80 PSI to 120 PSI

OPTIONS

- Solenoid Valves with Optional Voltages
- Declutchable Manual Override
- Auxiliary Limit Switch
- Cycle Speed Control
- Positioner

TECHNICAL INFORMATION

EXPLODED VIEW

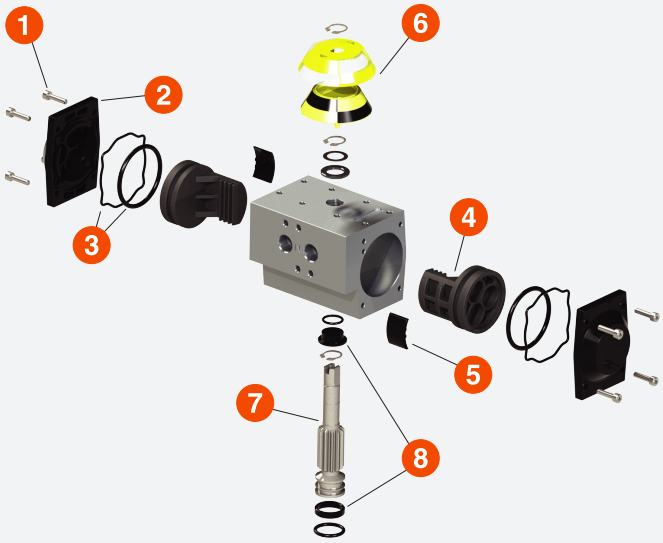

SPECIFICATIONS

HOUSING	Extruded Aluminium
OUTPUT SHAFT	Carbon Steel, Electroless Nickel Plated
SEALS	Nitrile
MINIMUM AIR PRESSURE	80 PSI
MAXIMUM AIR PRESSURE	120 PSI
CYCLE TIME	Half Second, Typical
AIR PORT CONNECTIONS	1/4" NPT
NAMUR MOUNTING	VDI / VDE / 3845
OPERATING TEMPERATURE RANGE	-4°F to 176°F

TECHNICAL INFORMATION, *CONTINUED*

DIMENSIONS

MODEL	A in / mm	B in / mm	D in / mm	E in / mm	H in / mm	J in / mm	K	L in / mm	FLANGE STANDARD	WEIGHT (lbs)
PMD604	2.75 / 70	3.93 / 100	0.43 / 11	0.47 / 12	1.85 / 47	2.64 / 67	9	3.94 / 100	F03	1.06
PMD612	2.80 / 71	3.98 / 101	0.49 / 12	0.47 / 12	1.85 / 47	2.64 / 67	11	4.69 / 119	F03/F05	2.00
PMD614	2.68 / 68	3.86 / 98	0.65 / 17	0.47 / 12	2.07 / 53	2.76 / 70	11	6.30 / 160	F03/F05	2.76
PMD616	3.19 / 81	4.37 / 111	0.75 / 19	0.47 / 12	2.44 / 62	3.19 / 81	14	6.50 / 165	F05/F07	3.52
PMD617	3.19 / 81	4.37 / 111	0.75 / 19	0.47 / 12	2.44 / 62	3.19 / 81	14	7.76 / 197	F05/F07	4.22
PMD621	3.86 / 98	5.04 / 128	0.75 / 19	0.55 / 14	3.01 / 76	3.78 / 96	17	6.70 / 170	F05/F07	5.17
PMD626	3.86 / 98	5.04 / 128	0.75 / 19	0.55 / 14	3.01 / 76	3.78 / 96	17	9.41 / 239	F05/F07	7.15
PMD631	4.61 / 117	5.79 / 147	0.91 / 23	0.77 / 20	3.56 / 90	4.49 / 114	17	9.06 / 230	F05/F07	9.13
PMD636	6.06 / 154	7.24 / 184	1.18 / 30	0.77 / 20	3.76 / 96	5.16 / 161	22	9.69 / 246	F07/F10	14.60
PMD641	6.06 / 154	7.24 / 184	1.18 / 30	0.77 / 20	3.76 / 96	5.16 / 161	22	11.42 / 290	F07/F10	17.20
PMD646	6.63 / 168	7.81 / 198	1.18 / 30	1.10 / 28	3.88 / 99	5.71 / 145	22	13.81 / 351	F07/F10	24.20
PMD651	8.00 / 203	9.18 / 233	1.57 / 40	1.10 / 28	4.33 / 110	7.13 / 181	27	14.21 / 361	F10/F12	35.30
PMD656	7.95 / 202	9.13 / 232	1.57 / 40	1.10 / 28	4.90 / 124	7.13 / 181	27	16.46 / 418	F10/F12	44.10
PMD661	10.12 / 257	11.30 / 287	1.97 / 50	1.10 / 28	6.32 / 161	9.13 / 232	36	17.48 / 444	F10/F12	61.50
PMD667	10.12 / 257	11.30 / 287	1.97 / 50	1.10 / 28	6.32 / 161	9.13 / 232	36	19.76 / 502	F10/F12	84.50
PMD671	12.99 / 330	14.17 / 360	2.45 / 62	1.10 / 28	6.22 / 158	12.99 / 330	46	22.83 / 580	F16	147.30
PMD676	12.99 / 330	14.17 / 360	2.45 / 62	1.10 / 28	6.22 / 158	12.99 / 330	46	26.69 / 678	F16	179.90

ACTUATOR OPERATING SYSTEMS

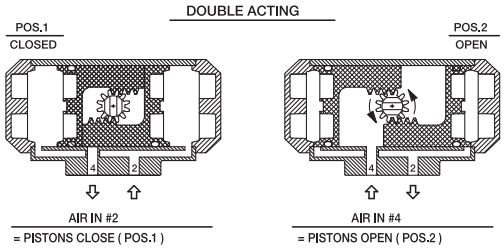

ACTUATOR SPECIFICATIONS

	Torque Output* (in. /lb.) @ 80psi	Air Consumption** (cu. in.)
PMD604	80	4.03
PMD612	125	13.50
PMD614	207	15.26
PMD616	275	25.60
PMD617	360	34.30
PMD621	500	44.40
PMD626	750	68.70
PMD631	1000	88.90
PMD636	1600	153.10

	Torque Output* (in. /lb.) @ 80psi	Air Consumption** (cu. in.)
PMD641	2000	190.60
PMD646	3125	275.00
PMD651	4500	425.00
PMD656	6000	565.50
PMD661	9100	881.30
PMD667	12000	1037.56
PMD671	23500	1694.00
PMD676	31500	1963.00

*At end of travel
**0°-90°-0° travel

TOP

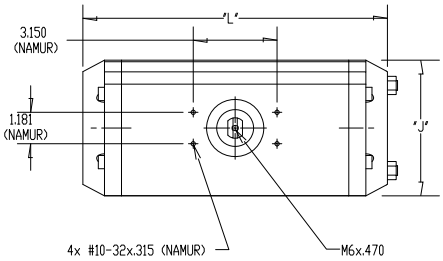

FRONT

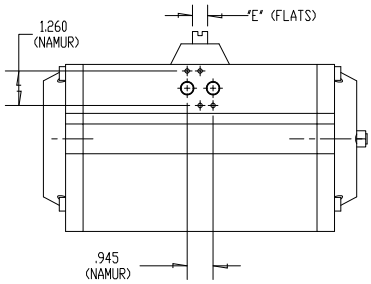

SIDE

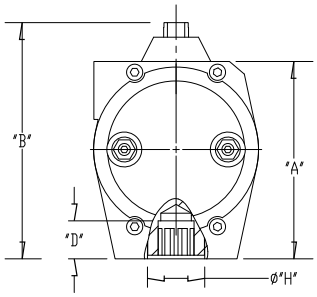

BOTTOM

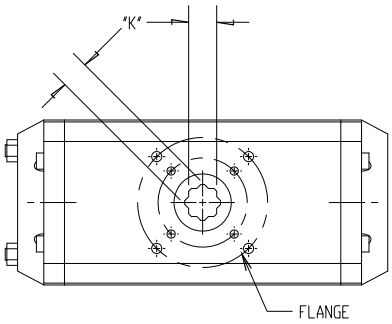

Hayward is a registered trademark of Hayward Industries, Inc.
© 2020 Hayward Industries, Inc.

USA: 1.888.429.4635 • Fax: 1.888.778.8410 • One Hayward Industrial Drive • Clemmons, NC 27012 • Email: hfcsales@hayward.com
Canada: 1.888.238.7665 • Fax: 1.905.829.3636 • 2880 Plymouth Drive • Oakville, ON L6H 5R4 • Email: hflowcanada@hayward.com
Visit us at: haywardflowcontrol.com

PMS6 Series Spring Return Pneumatic Actuators

FOR BALL VALVES UP TO 6"
FOR BUTTERFLY VALVES UP TO 16"

MANUAL OVERRIDE
SAFE

KEY FEATURES

- Spring Return Fail-Safe Operation
- Industrial Aluminium Housing
- Ideal for Heavy Duty Applications
- Anodized Aluminum Two-Piston Rack and 303 Stainless Steel Pinion
- Manual Override
- Position Indicator
- Permanent Lubrication
- Adjustable End Stops
- Namur-Style Top-Works Mounting
- Namur-Style Solenoid Mounting
- ISO 5211 Mounting Base
- Stainless Steel Fasteners
- Alternative Operating Media for 80 PSI to 120 PSI

OPTIONS

- Solenoid Valves with Optional Voltages
- Declutchable Manual Override
- Auxiliary Limit Switch
- Cycle Speed Control
- Positioner

TECHNICAL INFORMATION

EXPLODED VIEW

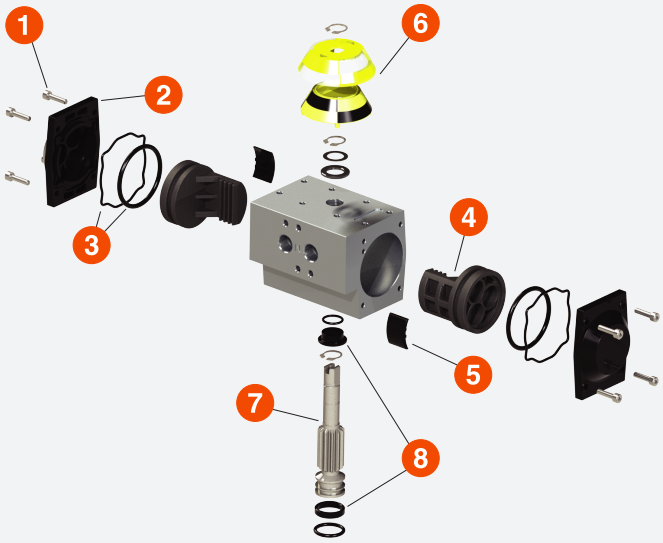

SPECIFICATIONS

HOUSING	Extruded Aluminium
OUTPUT SHAFT	Carbon Steel, Electroless Nickel Plated
SEALS	Nitrile
MINIMUM AIR PRESSURE	80 PSI
MAXIMUM AIR PRESSURE	120 PSI
CYCLE TIME	Half Second, Typical
AIR PORT CONNECTIONS	1/4" NPT
NAMUR MOUNTING	VDI / VDE / 3845
OPERATING TEMPERATURE RANGE	-4°F to 176°F

TECHNICAL INFORMATION, *CONTINUED*

DIMENSIONS

MODEL*	A in / mm	B in / mm	D in / mm	E in / mm	H in / mm	J in / mm	K	L in / mm	FLANGE STANDARD	WEIGHT (lbs)
PMS612	2.80 / 71	3.98 / 101	0.49 / 12	0.47 / 12	1.85 / 47	2.64 / 67	9	4.69 / 119	F03/F05	2.18
PMS614	2.68 / 68	3.86 / 98	0.65 / 17	0.47 / 12	2.07 / 53	2.76 / 70	11	6.30 / 160	F03/F05	3.00
PMS616	3.19 / 81	4.37 / 111	0.75 / 19	0.47 / 12	2.44 / 62	3.19 / 81	14	6.50 / 165	F05/F07	3.94
PMS617	3.19 / 81	4.37 / 111	0.75 / 19	0.47 / 12	2.44 / 62	3.19 / 81	14	7.76 / 197	F05/F07	4.75
PMS621	3.86 / 98	5.04 / 128	0.75 / 19	0.55 / 14	3.01 / 76	3.78 / 96	17	6.70 / 170	F05/F07	6.00
PMS626	3.86 / 98	5.04 / 128	0.75 / 19	0.55 / 14	3.01 / 76	3.78 / 96	17	9.41 / 239	F05/F07	8.30
PMS631	4.61 / 117	5.79 / 147	0.91 / 23	0.77 / 20	3.56 / 90	4.49 / 114	17	9.06 / 230	F05/F07	10.74
PMS636	6.06 / 154	7.24 / 184	1.18 / 30	0.77 / 20	3.76 / 96	5.16 / 161	22	9.69 / 246	F07/F10	17.80
PMS641	6.06 / 154	7.24 / 184	1.18 / 30	0.77 / 20	3.76 / 96	5.16 / 161	22	11.42 / 290	F07/F10	20.90
PMS646	6.63 / 168	7.81 / 198	1.18 / 30	1.10 / 28	3.88 / 99	5.71 / 145	22	13.81 / 351	F07/F10	29.90
PMS651	8.00 / 203	9.18 / 233	1.57 / 40	1.10 / 28	4.33 / 110	7.13 / 181	27	14.21 / 361	F10/F12	42.00
PMS656	7.95 / 202	9.13 / 232	1.57 / 40	1.10 / 28	4.90 / 124	7.13 / 181	27	16.46 / 418	F10/F12	53.80
PMS661	10.12 / 257	11.30 / 287	1.97 / 50	1.10 / 28	6.32 / 161	9.13 / 232	36	17.48 / 444	F10/F12	83.10
PMS667	10.12 / 257	11.30 / 287	1.97 / 50	1.10 / 28	6.32 / 161	9.13 / 232	36	19.76 / 502	F10/F12	105.60
PMS671	12.99 / 330	14.17 / 360	2.45 / 62	1.10 / 28	6.22 / 158	12.99 / 330	46	22.83 / 580	F16	182.90
PMS676	12.99 / 330	14.17 / 360	2.45 / 62	1.10 / 28	6.22 / 158	12.99 / 330	46	22.83 / 580	F16	216.10

*Standard is spring CW (Fail Closed). Add "FO" suffix to model number for spring CCW (Fail Open).

ACTUATOR OPERATING SYSTEMS

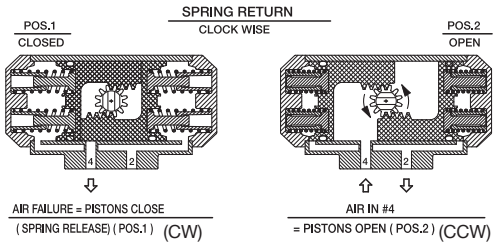

ACTUATOR SPECIFICATIONS

	Torque Output* (in. /lb.) @ 80psi Air / Spring	Air Consumption** (cu. in.)
PMS612	66 / 27	8.00
PMS614	80 / 77	6.10
PMS616	134 / 88	11.20
PMS617	160 / 128	15.60
PMS621	230 / 193	18.10
PMS626	309 / 260	30.00
PMS631	467 / 373	40.60
PMS636	767 / 571	75.00

	Torque Output* (in. /lb.) @ 80psi Air / Spring	Air Consumption** (cu. in.)
PMS641	929 / 737	100.00
PMS646	1399 / 901	115.60
PMS651	2173 / 1749	181.30
PMS656	2638 / 2282	256.30
PMS661	4277 / 3734	343.80
PMS667	5211 / 4976	443.80
PMS671	10737 / 8637	600.00
PMS676	12490 / 11598	731.00

*At end of travel
**0°-90° travel

TOP

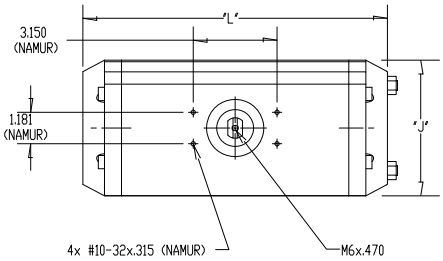

FRONT

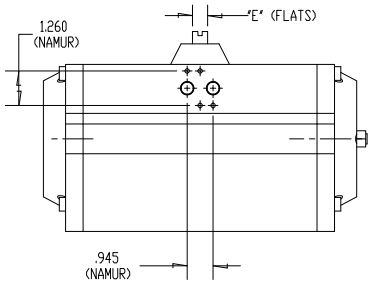

SIDE

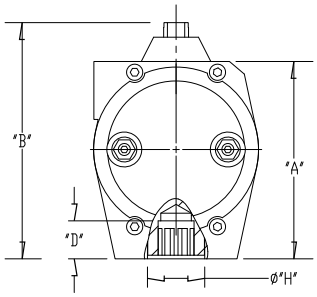

BOTTOM

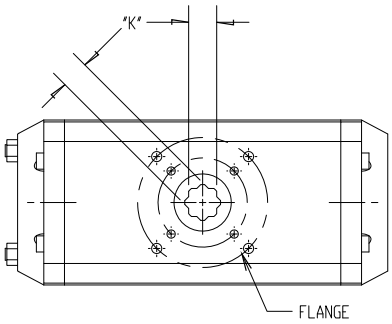

Hayward is a registered trademark of Hayward Industries, Inc.
© 2020 Hayward Industries, Inc.

USA: 1.888.429.4635 • Fax: 1.888.778.8410 • One Hayward Industrial Drive • Clemmons, NC 27012 • Email: hfcsales@hayward.com
Canada: 1.888.238.7665 • Fax: 1.905.829.3636 • 2880 Plymouth Drive • Oakville, ON L6H 5R4 • Email: hflowcanada@hayward.com
Visit us at: haywardflowcontrol.com

PCD Series Double Acting Pneumatic Actuators

FOR BALL AND BUTTERFLY VALVES UP TO 18"

KEY FEATURES

- Double Acting Air-to-Open and Close
- For All Sizes of Ball and Butterfly Valves
- Four-Piston Rack and Pinion Design
- Manual Override
- Compact, Lightweight
- Position Indicator
- Namur-Style Solenoid Mounting (Inlet/Outlet)
- Adjustable Travel Stops
- ISO5211 Mounting Base

OPTIONS

- Solenoid Valves with Optional Voltages
- Declutchable Manual Override
- Positioners
- Auxiliary Limit Switch
- Cycle Speed Control

TECHNICAL INFORMATION

EXPLODED VIEW

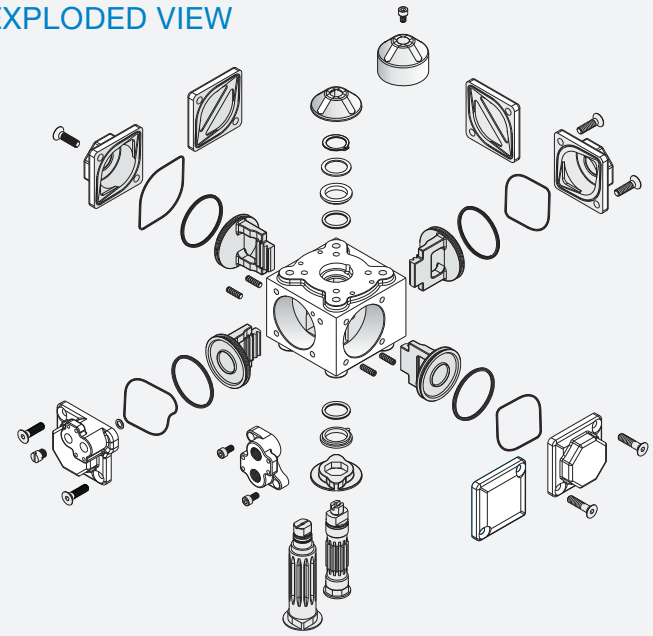

SPECIFICATIONS

HOUSING	Epoxy-Coated Aluminum
OUTPUT SHAFT	Plated Steel
MINIMUM AIR PRESSURE	80 PSI
MAXIMUM AIR PRESSURE	120 PSI
CYCLE TIME	Less Than One Second, Typical
AIR PORT CONNECTIONS	1/4" NPT

TECHNICAL INFORMATION, *CONTINUED*

DIMENSIONS

MODEL	1 in / mm	2 in / mm	3 in / mm	4 in / mm	5 in / mm	ISO 5211 MOUNT	AIR CONSUMPTION cu. in.
PCD 15	3.39 / 86	3.85 / 98	3.50 / 89	.53 / 13	.35 / 9	F05 (1.97)	5.5
PCD 20	4.03 / 102	4.60 / 117	3.96 / 101	.59 / 15	.43 / 11	F05 (1.97)	9.2
PCD 25	5.24 / 133	5.79 / 147	4.61 / 117	.77 / 20	.55 / 14	F07 (2.76)	20
PCD 35	7.15 / 182	7.94 / 202	6.10 / 155	1.02 / 26	.87 / 22	F10 (4.02)	49
PCD 45	8.70 / 220	9.65 / 245	7.24 / 184	1.30 / 33	1.06 / 27	F12 (4.92)	81
PCD 60	11.22 / 285	N/A	9.76 / 248	1.69 / 43	1.42 / 36	F14 (5.51)	195
PCD 75	13.46 / 342	N/A	11.81 / 300	1.69 / 43	1.42 / 36	F14 (5.51)	351

Dimensions are subject to change without notice – consult factory for installation information

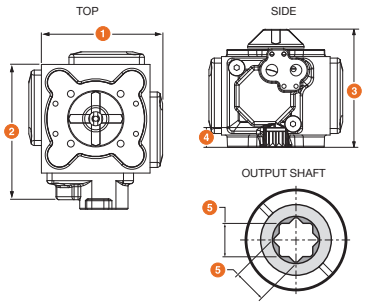

ACTUATOR SPECIFICATIONS

MODEL	PCD15	PCD20	PCD25	PCD35	PCD45	PCD60	PCD75
Torque Output (in-lbs) @ 80 PSI	172	311	639	1,848	3,622	8,585	15,856
Enclosure Material	Epoxy-Coated Aluminum						
Output Shaft	Plated Steel						
Air Port Connections	1/4" NPT						
Air Consumption (cu. in.)	5.5	9.2	20	49	81	195	351
Air Transfer	Internal						
Stroke Time (seconds)	0.2	0.4	0.7	1.0	1.5	2.5	4.0
Cycle Time	Under 1 Second Typical-Depends on Solenoid						
Minimum Air Pressure	80 PSI						
Maximum Air Pressure	120 PSI						
Operation	Rack and Pinion						
Weight (lbs / kg)	2.1 / 0.9	3.3 / 1.5	6.2 / 2.8	16 / 7.1	24 / 11	57 / 26	112 / 51

VALVE SELECTION CHART

SIZE* in / DN	TB / TBH / CV / CVH SERIES BALL VALVES	TW/LA SERIES BALL VALVES	BYV/BYB SERIES BUTTERFLY VALVES
1/2 - 1-1/2 / 15 - 40	PCD15	PCD15	N/A
2 / 50	PCD15	PCD15	PCD20
2-1/2 / 65	PCD20	PCD20	PCD20
3 / 80	PCD20	PCD20	PCD20
4 / 100	PCD20	PCD20	PCD25
6 / 150	PCD20	PCD20	PCD25
8 / 200	N/A	N/A	PCD35
10 – 12 / 250 – 300	N/A	N/A	PCD45
14 / 350	N/A	N/A	PCD60
16 – 18 / 400 – 450	N/A	N/A	PCD75

* Actuator size selections based on clean water at 70°F

Hayward is a registered trademark of Hayward Industries, Inc.
© 2020 Hayward Industries, Inc.

USA: 1.888.429.4635 • Fax: 1.888.778.8410 • One Hayward Industrial Drive • Clemmons, NC 27012 • Email: hfcsales@hayward.com
Canada: 1.888.238.7665 • Fax: 1.905.829.3636 • 2880 Plymouth Drive • Oakville, ON L6H 5R4 • Email: hflowcanada@hayward.com
Visit us at: haywardflowcontrol.com

PCS Series Spring Return Pneumatic Actuators

FOR BALL AND BUTTERFLY VALVES UP TO 8"

MANUAL OVERRIDE SAFE

KEY FEATURES

- Spring Return Fail-Safe Operation
- For All Sizes of Ball and Butterfly Valves
- Four-Piston Rack and Pinion Design
- Manual Override
- Compact, Lightweight
- Position Indicator
- Namur-Style Solenoid Mounting (Inlet/Outlet)
- Adjustable Travel Stops
- ISO5211 Mounting Base

OPTIONS

- Solenoid Valves with Optional Voltages
- Declutchable Manual Override
- Positioners
- Auxiliary Limit Switch
- Cycle Speed Control

TECHNICAL INFORMATION

EXPLODED VIEW

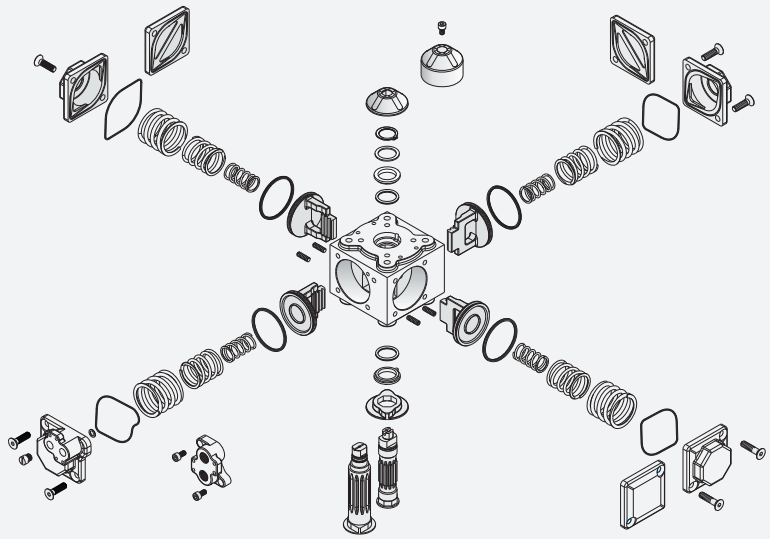

SPECIFICATIONS

HOUSING	Epoxy-Coated Aluminum
OUTPUT SHAFT	Plated Steel
MINIMUM AIR PRESSURE	80 PSI
MAXIMUM AIR PRESSURE	120 PSI
CYCLE TIME	Less Than One Second, Typical
AIR PORT CONNECTIONS	1/4" NPT

TECHNICAL INFORMATION, *CONTINUED*

DIMENSIONS

MODEL	1 in / mm	2 in / mm	3 in / mm	4 in / mm	5 in / mm	ISO 5211 MOUNT	AIR CONSUMPTION cu. in.
PCS 15	4.31 / 109	4.31 / 109	3.50 / 89	.53 / 13	.35 / 9	F05 (1.97)	5.5
PCS 20	5.17 / 131	5.17 / 131	3.96 / 101	.59 / 15	.43 / 11	F05 (1.97)	9.2
PCS 25	6.34 / 161	6.34 / 161	4.61 / 117	.77 / 20	.55 / 14	F07 (2.76)	20
PCS 30	7.33 / 186	7.33 / 186	5.37 / 136	.87 / 22	.67 / 17	F07 (2.76)	33
PCS 35	8.74 / 222	8.74 / 222	6.10 / 155	1.02 / 26	.87 / 22	F10 (4.02)	49
PCS 45	10.59 / 269	10.59 / 269	7.24 / 184	1.30 / 33	1.06 / 27	F12 (4.92)	81

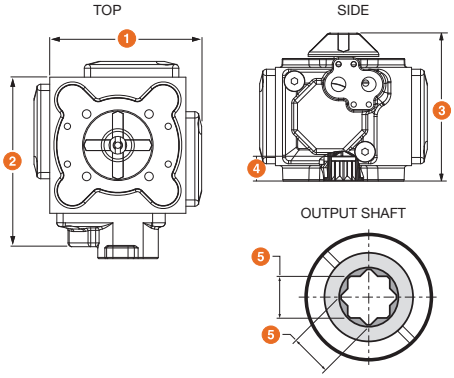

Dimensions are subject to change without notice – consult factory for installation information.
Standard is spring CW (Fail Closed). Add "FO" suffix to model number for spring CCW (Fail Open).

ACTUATOR SPECIFICATIONS

MODEL	PCS15	PCS20	PCS25	PCS30	PCS35	PCS45
Torque Output (in-lbs) @ 80 PSI	61	109	217	345	607	1,218
Enclosure Material	Epoxy-Coated Aluminum					
Output Shaft	Plated Steel					
Air Port Connections	1/4" NPT					
Air Consumption (cu. in.)	5.5	9.2	20	33	49	81
Air Transfer	Internal					
Stroke Time (seconds)	0.2	0.4	0.7	0.8	1.0	1.5
Cycle Time	Under 1 Second Typical-Depends on Solenoid					
Minimum Air Pressure	80 PSI					
Maximum Air Pressure	120 PSI					
Operation	Rack and Pinion					
Weight (lbs / kg)	2 / 1.1	4 / 1.9	8 / 3.5	11 / 5.0	20 / 9.0	33 / 15

VALVE SELECTION CHART

SIZE* in / DN	TB / TBH / CV / CVH SERIES BALL VALVES	TW/LA SERIES BALL VALVES	BYV SERIES BUTTERFLY VALVES
1/2 - 1 / 15 - 25	PCS15	PCS15	N/A
1-1/4 - 1-1/2 / 32 - 40	PCS15 / PCS20	PCS20	N/A
2 / 50	PCS20	PCS20	PCS25
2-1/2 / 65	PCS25	PCS25	PCS25
3 / 80	PCS25	PCS25 / PCS30	PCS25
4 / 100	PCS25	PCS30	PCS30
6 / 150	PCS25	PCS30	PCS35
8 / 200	N/A	N/A	PCS45

* Actuator size selections based on clean water at 70°F

Hayward is a registered trademark of Hayward Industries, Inc.
© 2020 Hayward Industries, Inc.

USA: 1.888.429.4635 • Fax: 1.888.778.8410 • One Hayward Industrial Drive • Clemmons, NC 27012 • Email: hfcsales@hayward.com
Canada: 1.888.238.7665 • Fax: 1.905.829.3636 • 2880 Plymouth Drive • Oakville, ON L6H 5R4 • Email: hflowcanada@hayward.com
Visit us at: haywardflowcontrol.com

Pneumatic Actuator Accessories

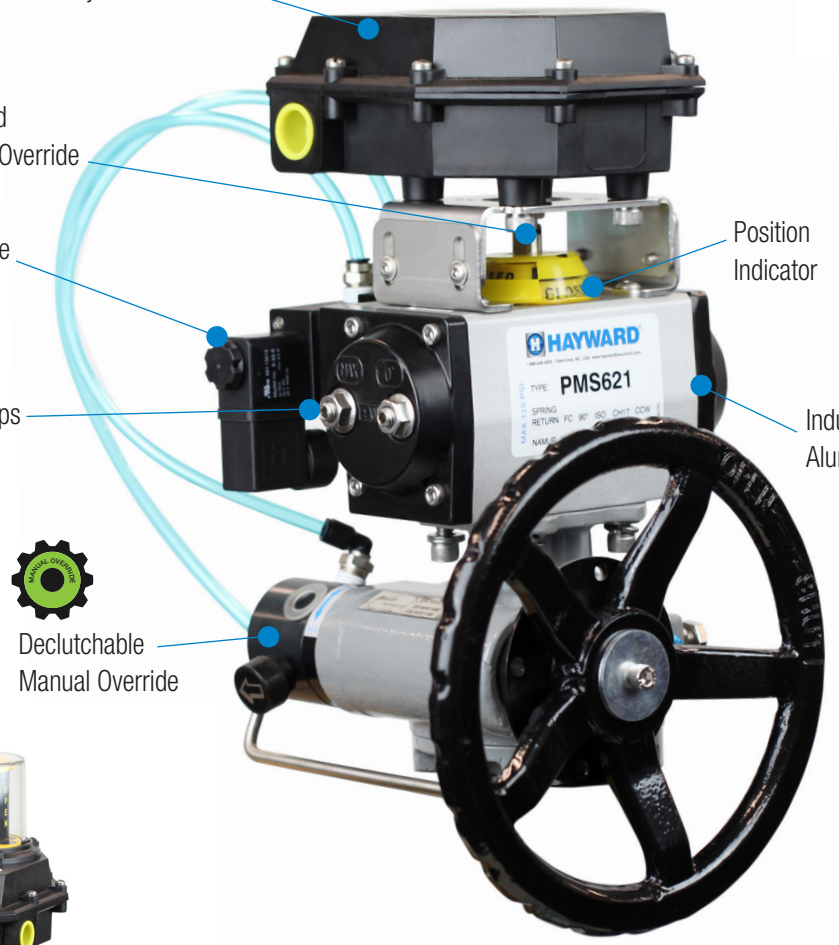

SUFFIX A10
Pneumatic Filter-Regulator with Gauge

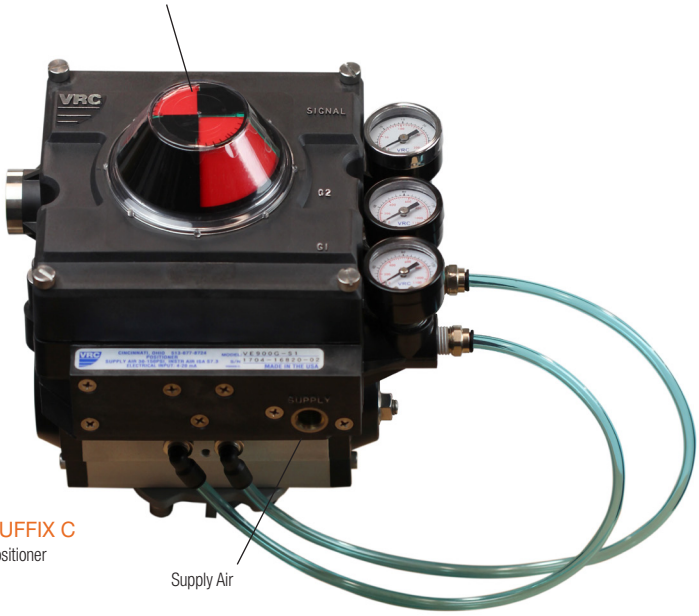

SUFFIX C
Positioner

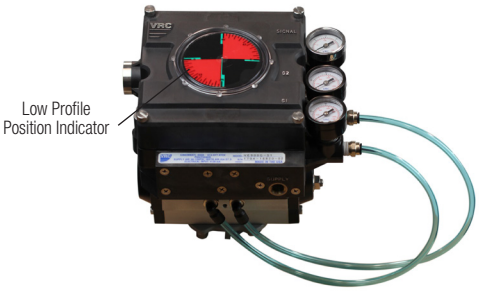

Pneumatic Actuator Accessories, *CONTINUED*

EXTENDED DESCRIPTIONS

PNEUMATIC FILTER-REGULATOR, WITH GAUGE

SUFFIX A10

(For all pneumatic actuators)

Pneumatic Filter-Regulator with bracket and gauge mounts to the actuator. For removal of moisture and miniscule debris such as scale from compressed air lines. Eliminates buildup of corrosion that can affect actuator and solenoid operation. Features include: 1/4" NPT inlet connection, piston operated, 25 micron sintered brass filter, 0-160 PSI gauge, and 1-2 oz. clear polycarbonate collection bowl. Maximum operating pressure 100 PSI (optimum 80 PSI). Weight 0.79 lb.

PNEUMATIC POSITIONER (RYTON®)

SUFFIX C
3-15 PSI INPUT, AIR/AIR AND AIR/SPRING

(For PCD and PCS series actuators)

This pneumatic positioner is mounted on the top of either the double acting or spring return pneumatic actuator, with low profile mounting hardware specifically designed to minimize hysteresis.

Features of this positioner include: precise performance for economical operation, standard flat lens position indicator for 90° and 0° – 180° indication, color coded proportional sections to improve interpretation over single-color indicators. Both the flat lens and beacon lens indicators are field adjustable. Indicator colors are red and green, beacon lenses are clear Lexan®, NEMA 4, 4X, dust-tight, corrosion resistant in hostile process and outdoor environments, high strength, (pps) polyphenylene sulfide-(Ryton) enclosure with 300 stainless captive hardware, NASA rated for fire safety, single and double acting, direct and reverse acting, full and split ranges, 0° to 90° and 0° to 180° rotation. Advanced balanced port spool valve for vibration and corrosion resistance, reliability, and low air consumption. Gauge block with 3 gauges, 2-1/2" conduit entries, supply connection 1/8" NPT, air consumption 0.25 scfm @ 80 PSI. Weight 2 lbs.

This positioner also offers extensive options such as: Integral position indicator with color lenses; stainless steel gauges, (1) 0-30 PSI and (2) 0-160 PSI; integral position transmitter, 4-20 mA or resistive outputs; integral limit switches, mechanical and proximity.

Note: All NPT air ports must be sealed with PTFE paste, non-hardening type. Never use PTFE tape. Maximum applied torque to air fittings is 12 ft-lbs for 1/4" NPT and 6 ft-lbs for 1/8" NPT.

Lexan® is a registered trademark of General Electric
Ryton® is a registered trademark of Chevron Phillips Chemicals

Hayward is a registered trademark of Hayward Industries, Inc.
© 2020 Hayward Industries, Inc.

Pneumatic Actuator Accessories, *CONTINUED*

EXTENDED DESCRIPTIONS

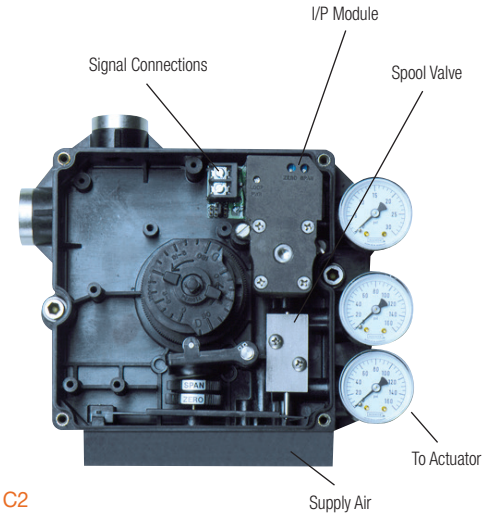

SUFFIX C2

ELECTRO/PNEUMATIC POSITIONER (RYTON®)

SUFFIX C2
4-20 MA INPUT, AIR/AIR AND AIR/SPRING
(For PCD and PCS series actuators)

Conversion of the pneumatic positioner to an electro/pneumatic positioner
requires only the simple addition of a single module inside the positioner enclosure using (2) captive mounting screws. Features of this electro/pneumatic positioner include: continuously adjustable split ranging, red LED loop power indication, reversible and de-pluggable current loop connections, selectable speed control, I/P final air supply filtration-30 micron-replaceable, automatic compensation for supply air pressure, atmospheric pressure and ambient temperature changes, radio frequency interference (RFI) and transient protection, vibration resistant construction, linear speed control.

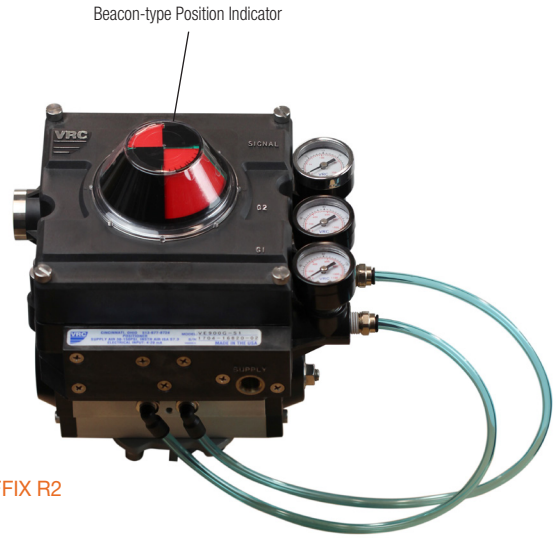

SUFFIX R2

INTEGRAL POSITION INDICATOR, BEACON WITH COLOR

SUFFIX R2
(For C and C2 positioners only)

The standard flat lens position indicator on top of the positioner can be changed to a beacon type. This, like the flat lens, is color coded and proportionally sectional to improve interpretation over single color indicators. Features include: wide angle
visibility, NEMA 4, 4X, 0° to 90° indication, high impact corrosion resistant and UV stabilized, high visibility fluorescent red and green rotor and contrasting black lens, on/off and proportional indication.

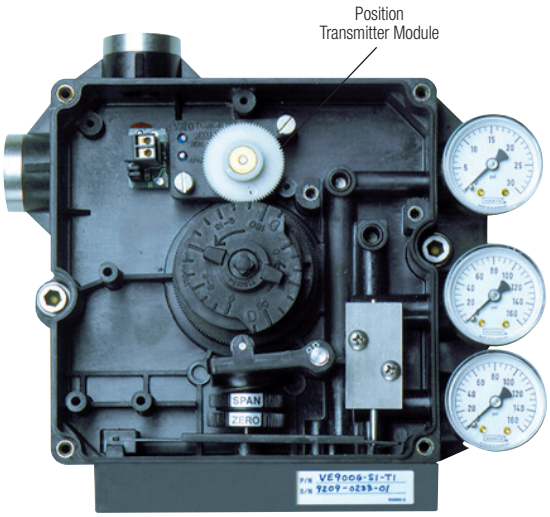

SUFFIX R5

INTEGRAL POSITION TRANSMITTER

SUFFIX R5, R9 AND R10
4-20 MA OUTPUT
(For C and C2 positioners only)

The integral position transmitter is mounted inside the positioner enclosure with position pickup directly from the positioner shaft. Easily mounted with captive stainless steel screws, direct driven, polarity reversible 2-wire connections, environmentally sealed, potentiometer type zero and span adjustments, red-LED power loop indicator, de-pluggable terminal block and jumper selectable for reverse output.
The position transmitter must be specified by the output signal desired.

Position Transmitter, 4-20 mA Output.....add suffix R5

Integral Limit Switches, Mechanical, 2 SPDT .....add suffix R9

Integral Limit Switches, Proximity, 2 SPST .....add suffix R10

SUFFIX S2

SUFFIX S4

Zytel® is a registered trademark of DuPont

Pneumatic Actuator Accessories, *CONTINUED*

EXTENDED DESCRIPTIONS

TOP MOUNTED LIMIT SWITCHES ZYTEL® ENCLOSURE

SUFFIX S2 AND S4
NEMA 4X, FLAT COVER, 2 SPDT, 15 AMPS
NEMA 4X, BEACON, 2 SPDT, 15 AMPS

(For PCD, PCS, PMD and PMS series actuators)

This top mounted limit switch is designed to survive corrosive environments. High performance polyamide resin offers a viable alternative to metal enclosures. The “supertough” glass reinforced enclosure combines chemical resistance with high impact strength and immunity to weathering.

TOP MOUNTED LIMIT SWITCHES ALUMINUM/EPOXY ENCLOSURE

SUFFIX SA2 AND SA4
NEMA 4 AND 7, FLAT COVER, 2 SPDT, 15 AMPS
NEMA 4 AND 7, BEACON, 2 SPDT, 15 AMPS

(For PCD and PCS series actuators)

Intrinsically Safe Switch Box with Sealed Proximity Switches

Explosion Proof Switch Box for Class 1, Division 1 Applications

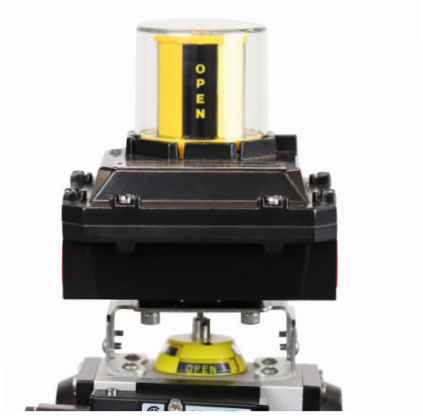

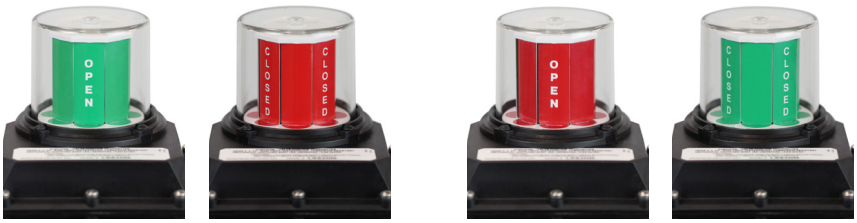

High Visibility Custom Beacon Position Indicators for both Industrial and/or Municipal Applications

Hayward is a registered trademark of Hayward Industries, Inc.
© 2020 Hayward Industries, Inc.

USA: 1.888.429.4635 • Fax: 1.888.778.8410 • One Hayward Industrial Drive • Clemmons, NC 27012 • Email: hfcsales@hayward.com
Canada: 1.888.238.7665 • Fax: 1.905.829.3636 • 2880 Plymouth Drive • Oakville, ON L6H 5R4 • Email: hflowcanada@hayward.com
Visit us at: haywardflowcontrol.com

EA Series Automated True Union Ball Valves

1/2" TO 2" PVC AND CPVC

VALVE FEATURES

- Available in PVC and CPVC
- EPDM Seals
- PTFE Seats
- Full Port Design
- Fully Serviceable
- Double O-Ring Stem Seals

ACTUATOR FEATURES

- UL/CSA Listed Motor
- Thermoplastic NEMA 4 / 4X enclosure
- 2.5 Second, 90° Cycle Time
- Thermal Overload Protection
- Permanently Lubricated Gear Train
- Motor Brake
- No Need for Manual Adjustments
- Blind Leads Connection
- Standard 120 VAC
- Unidirectional, Not Reversing

MATERIALS

- PVC Cell Class 12454 per ASTM D1784
- CPVC Cell Class 23447 per ASTM D1784
- EPDM O-Ring Seals

TECHNICAL INFORMATION

SELECTION CHART

SIZE	VALVE MATERIAL	END CONNECTION	VALVE SEALS	VALVE PRESSURE RATING
1/2" – 2" (DN15 – DN50)	PVC or CPVC	Socket and Threaded	EPDM	250 PSI @ 70°F 16 Bar @ 21°C Non-Shock

* PVC and CPVC socket ends available to ISO 727-1 and threaded ends to BS21.
Not for use with "Z" Ball.

TECHNICAL INFORMATION, *CONTINUED*

DIMENSIONS

SIZE in / DN	1 in / mm	2 in / mm	3 in / mm	4 in / mm	5 in / mm	WEIGHT lbs / kg
1/2 / 15	4.63 / 118	2.25 / 57	8.30 / 211	4.75 / 121	4.34 / 110	6.80 / 3.08
3/4 / 20	4.75 / 121	2.63 / 67	8.46 / 215	4.75 / 121	4.34 / 110	6.80 / 3.08
1 / 25	5.25 / 133	3.00 / 76	8.73 / 222	4.75 / 121	4.34 / 110	7.10 / 3.22
1-1/4 / 32	6.30 / 160	4.00 / 102	9.50 / 241	4.75 / 121	4.34 / 110	8.00 / 3.63
1-1/2 / 40	6.75 / 171	4.00 / 102	9.15 / 232	4.75 / 121	4.34 / 110	8.10 / 3.67
2 / 50	8.00 / 203	4.75 / 121	9.65 / 245	4.75 / 121	4.34 / 110	9.80 / 4.45

Dimensions are subject to change without notice – consult factory for installation information

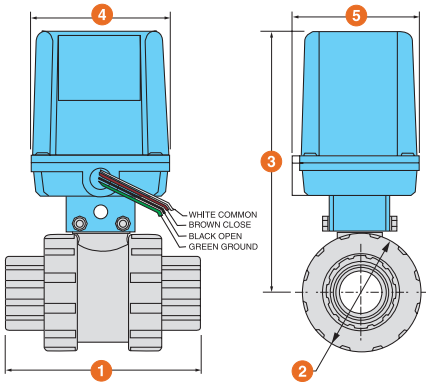

ACTUATOR SPECIFICATIONS

MODEL	EA
Torque Output (in-lbs)	120
Standard Voltage	120 VAC
Duty Cycle	25%
Thermal Overload	Standard
Cycle Time (secs @ 90°)	2.5
Conduit Entry	1/2" NPT
Enclosure	NEMA 4 / 4X
Enclosure Material	Polypropylene
Max Current Amps @ 115 VAC	1.8

VALVE SPECIFICATIONS

VALVE TYPE	TRUE UNION
Material of Construction	PVC, CPVC
Seals	FPM/EPDM
Seats	PTFE
End Connections	Socket or Threaded
Sizes	1/2", 3/4", 1", 1-1/4", 1-1/2" and 2"
Pressure Rating	250 PSI @ 70°F non-shock
Design	Full Port

Cv VALUES

SIZE in / DN	Cv VALUES	SIZE in / DN	Cv VALUES
1/2 / 15	8.0	1-1/4 / 32	75.0
3/4 / 20	15.0	1-1/2 / 40	90.0
1 / 25	29.0	2 / 50	140.0

PRESSURE LOSS CALCULATION FORMULA

$$\Delta P = \left[\frac{Q}{Cv}\right]^2$$

ΔP = Pressure Drop

Q = Flow in GPM

Cv = Flow Coefficient

Hayward is a registered trademark of Hayward Industries, Inc.
© 2020 Hayward Industries, Inc.

USA: 1.888.429.4635 • Fax: 1.888.778.8410 • One Hayward Industrial Drive • Clemmons, NC 27012 • Email: hfcsales@hayward.com
Canada: 1.888.238.7665 • Fax: 1.905.829.3636 • 2880 Plymouth Drive • Oakville, ON L6H 5R4 • Email: hflowcanada@hayward.com
Visit us at: haywardflowcontrol.com

EA1 Series Automated TBH Series Ball Valves

1/2" TO 2" PVC AND CPVC

Certified to NSF/ANSI 61 & 372

VALVE FEATURES

- System2™ Sealing Technology for longer life cycle
- 250 PSI / 16 Bar, non-shock at 70°F / 23°C full pressure rating
- Consistent Operating Torque with Adjustment-free Design
- ISO5211 Compliant Mounting Flange
- Permanent Markings, Eliminates Labels
- Integral Footpad for Skid or Panel Mount
- EPDM seals
- Double O-Ring stem seals
- Easy replacement for existing Hayward TB Series
- NSF / ANSI 61 and NSF / ANSI 372 listed

ACTUATOR FEATURES

- ISO5211 Compliant F05 Base
- UL/CSA Listed Motor
- Thermoplastic NEMA 4 / 4X enclosure
- Compact Assembly
- 2.5 Second, 90° Cycle Time
- Thermal Overload Protection
- Permanently Lubricated Gear Train
- Motor Brake
- No Need for Manual Adjustments
- Blind Leads Connection
- Standard 120 VAC
- Unidirectional, Not Reversing

MATERIALS

- PVC Cell Class 12454 per ASTM D1784
- CPVC Cell Class 23447 per ASTM D1784
- EPDM O-Ring Seals

TECHNICAL INFORMATION

SELECTION CHART

SIZE	VALVE MATERIAL	END CONNECTION	VALVE SEALS	VALVE PRESSURE RATING
1/2" – 2" (DN15 – DN50)	PVC or CPVC	Socket and Threaded	EPDM	250 PSI @ 70°F 16 Bar @ 21°C Non-Shock

* PVC and CPVC socket ends available to ISO 727-1 and threaded ends to BS21.
Not for use with "Z" Ball.

TECHNICAL INFORMATION, *CONTINUED*

DIMENSIONS

SIZE in / DN	1 in / mm	2 in / mm	3 in / mm	4 in / mm	5 in / mm	WEIGHT lbs / kg
1/2 / 15	4.63 / 118	2.25 / 57	7.99 / 203	4.88 / 124	4.34 / 110	6.80 / 3.10
3/4 / 20	4.75 / 122	2.63 / 67	8.15 / 207	4.88 / 124	4.34 / 110	7.00 / 3.20
1 / 25	5.34 / 136	3.00 / 76	8.42 / 214	4.88 / 124	4.34 / 110	7.10 / 3.20
1-1/4 / 32	6.83 / 173	4.00 / 102	8.84 / 225	4.88 / 124	4.34 / 110	8.40 / 3.80
1-1/2 / 40	7.39 / 188	4.00 / 102	8.84 / 225	4.88 / 124	4.34 / 110	8.60 / 3.90
2 / 50	7.99 / 203	4.75 / 121	9.35 / 237	4.88 / 124	4.34 / 110	9.90 / 4.50

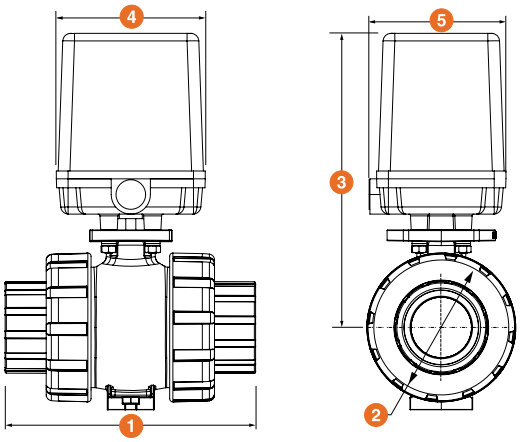

Dimensions are subject to change without notice – consult factory for installation information

ACTUATOR SPECIFICATIONS

MODEL	EA1
Torque Output (in-lbs)	120
Standard Voltage	120 VAC
Duty Cycle	25%
Thermal Overload	Standard
Cycle Time (secs @ 90°)	2.5
Conduit Entry	1/2" NPT
Enclosure	NEMA 4 / 4X
Enclosure Material	Polypropylene
Max Current Amps @ 115 VAC	1.8

VALVE SPECIFICATIONS

VALVE TYPE	TRUE UNION
Material of Construction	PVC, CPVC
Seals	EPDM
Seats	PTFE
End Connections	Socket or Threaded
Sizes	1/2", 3/4", 1", 1-1/4" 1-1/2" and 2"
Pressure Rating	250 PSI @ 70°F non-shock
Design	Full Port

Cv VALUES

SIZE in / DN	Cv VALUES	SIZE in / DN	Cv VALUES
1/2 / 15	8.0	1-1/4 / 32	75.0
3/4 / 20	16.0	1-1/2 / 40	90.0
1 / 25	29.0	2 / 50	150.0

PRESSURE LOSS CALCULATION FORMULA

$$\Delta P = \left[\frac{Q}{Cv}\right]^2$$

ΔP = Pressure Drop

Q = Flow in GPM

Cv = Flow Coefficient

Hayward is a registered trademark of Hayward Industries, Inc.
© 2020 Hayward Industries, Inc.

USA: 1.888.429.4635 • Fax: 1.888.778.8410 • One Hayward Industrial Drive • Clemmons, NC 27012 • Email: hfcsales@hayward.com
Canada: 1.888.238.7665 • Fax: 1.905.829.3636 • 2880 Plymouth Drive • Oakville, ON L6H 5R4 • Email: hflowcanada@hayward.com
Visit us at: haywardflowcontrol.com

EAU Series Automated True Union Ball Valves

1/2" TO 2" PVC AND CPVC

VALVE FEATURES

- Available in PVC and CPVC
- FPM or EPDM Seals
- PTFE Seats
- Full Port Design
- Fully Serviceable
- Double O-Ring Stem Seals

ACTUATOR FEATURES

- UL/CSA Listed Motor
- Thermoplastic NEMA 4 / 4X Enclosure
- 2.5 Second, 90° Cycle Time
- Permanently Lubricated Gear Train
- Motor Brake
- 90 or 180° Operation
- Unidirectional, Not Reversing
- Terminal Block Connections
- Standard 120 VAC
- End of Travel Dry Contact Limit Switch
- Thermal Overload Protection
- Lightweight, Compact and Inexpensive

OPTIONS

- 24VAC / VDC
- 230 VAC

MATERIALS

- PVC Cell Class 12454 per ASTM D1784
- CPVC Cell Class 23447 per ASTM D1784
- FPM and EPDM Seals

TECHNICAL INFORMATION

SELECTION CHART

SIZE	VALVE MATERIAL	END CONNECTION	VALVE SEALS	VALVE PRESSURE RATING
1/2" – 2" (DN15 – DN50)	PVC or CPVC	Socket and Threaded	FPM or EPDM	250 PSI @ 70°F 16 Bar @ 21°C Non-Shock

* PVC and CPVC socket ends available to ISO 727-1 and threaded ends to BS21.
Not for use with "Z" Ball.

TECHNICAL INFORMATION, *CONTINUED*

DIMENSIONS

SIZE in / DN	1 in / mm	2 in / mm	3 in / mm	4 in / mm	5 in / mm	WEIGHT lbs / kg
1/2 / 15	4.63 / 118	2.25 / 57	8.40 / 213	4.88 / 124	4.13 / 105	6.80 / 3.08
3/4 / 20	4.75 / 121	2.63 / 67	8.60 / 218	4.88 / 124	4.13 / 105	6.80 / 3.08
1 / 25	5.25 / 133	3.00 / 76	9.10 / 231	4.88 / 124	4.13 / 105	7.10 / 3.22
1-1/4 / 32	6.30 / 160	4.00 / 102	9.50 / 241	4.88 / 124	4.13 / 105	8.00 / 3.63
1-1/2 / 40	6.75 / 171	4.00 / 102	9.50 / 241	4.88 / 124	4.13 / 105	8.10 / 3.67
2 / 50	8.00 / 203	4.75 / 121	10.10 / 257	4.88 / 124	4.13 / 105	9.80 / 4.45

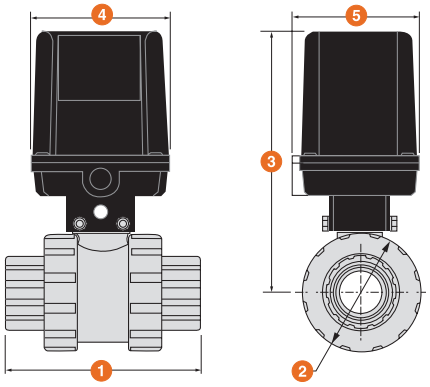

Dimensions are subject to change without notice – consult factory for installation information

ACTUATOR SPECIFICATIONS

MODEL	EAU1
Torque Output (in-lbs)	120
Standard Voltage	120 VAC
Duty Cycle	25%
Thermal Overload	Standard
Cycle Time (secs*)	2.5 / 5.0
Conduit Entry	1/2" NPT
Enclosure	NEMA 4 / 4X
Enclosure Material	Polypropylene
Max Current Amps @ 115 VAC	1.8 (60 Hz), 2.8 (50 Hz)

* EAU28 = 180° (5.0 sec), , EAU29 = 90° (2.5 sec.)

VALVE SPECIFICATIONS

VALVE TYPE	TRUE UNION
Material of Construction	PVC, CPVC
Seals	FPM/EPDM
Seats	PTFE
End Connections	Socket or Threaded
Sizes	1/2", 3/4", 1", 1-1/4" 1-1/2" and 2"
Pressure Rating	250 PSI @ 70°F non-shock
Design	Full Port

Cv VALUES

SIZE in / DN	Cv VALUES	SIZE in / DN	Cv VALUES
1/2 / 15	8.0	1-1/4 / 32	75.0
3/4 / 20	15.0	1-1/2 / 40	90.0
1 / 25	29.0	2 / 50	140.0

PRESSURE LOSS CALCULATION FORMULA

$$\Delta P = \left[\frac{Q}{Cv}\right]^2$$

ΔP = Pressure Drop

Q = Flow in GPM

Cv = Flow Coefficient

Hayward is a registered trademark of Hayward Industries, Inc.
© 2020 Hayward Industries, Inc.

USA: 1.888.429.4635 • Fax: 1.888.778.8410 • One Hayward Industrial Drive • Clemmons, NC 27012 • Email: hfcsales@hayward.com
Canada: 1.888.238.7665 • Fax: 1.905.829.3636 • 2880 Plymouth Drive • Oakville, ON L6H 5R4 • Email: hflowcanada@hayward.com
Visit us at: haywardflowcontrol.com

EAU1 Series Automated TBH Series Ball Valves

1/2" TO 2" PVC AND CPVC

NSF
Certified to NSF/ANSI 61 & 372

VALVE FEATURES

- System2™ Sealing Technology for longer life cycle
- 250 PSI / 16 Bar, non-shock at 70°F / 23°C full pressure rating
- Consistent operating torque with adjustment-free design
- ISO mounting flange
- Permanent markings, eliminates labels
- Integral footpad for skid or panel mount
- FPM or EPDM seals
- Double O-Ring stem seals
- Easy replacement for existing Hayward TB Series
- NSF / ANSI 61 and NSF / ANSI 372 listed

ACTUATOR FEATURES

- UL/CSA Listed Motor
- GFPP NEMA 4 / 4X Enclosure
- 2.5 Second, 90° Cycle Time
- Permanently Lubricated Gear Train
- Motor Brake
- 90 or 180° Operation
- Unidirectional, Not Reversing
- Terminal Block Connections
- Standard 120 VAC
- End of Travel Dry Contact Limit Switch
- Thermal Overload Protection
- Lightweight, Compact and Inexpensive

OPTIONS

- 24VAC / VDC
- 230 VAC

MATERIALS

- PVC Cell Class 12454 per ASTM D1784
- CPVC Cell Class 23447 per ASTM D1784
- FPM or EPDM Seals

TECHNICAL INFORMATION

SELECTION CHART

SIZE	VALVE MATERIAL	END CONNECTION	VALVE SEALS	VALVE PRESSURE RATING
1/2" – 2" (DN15 – DN50)	PVC or CPVC	Socket and Threaded	FPM or EPDM	250 PSI @ 70°F 16 Bar @ 21°C Non-Shock

* PVC and CPVC socket ends available to ISO 727-1 and threaded ends to BS21.
Not for use with "Z" Ball.

TECHNICAL INFORMATION, *CONTINUED*

DIMENSIONS

SIZE in / DN	1 in / mm	2 in / mm	3 in / mm	4 in / mm	5 in / mm	WEIGHT lbs / kg
1/2 / 15	4.63 / 118	2.25 / 57	7.99 / 203	4.88 / 124	4.34 / 110	6.80 / 3.10
3/4 / 20	4.75 / 122	2.63 / 67	8.15 / 207	4.88 / 124	4.34 / 110	7.00 / 3.20
1 / 25	5.34 / 136	3.00 / 76	8.42 / 214	4.88 / 124	4.34 / 110	7.10 / 3.20
1-1/4 / 32	6.83 / 173	4.00 / 102	8.84 / 225	4.88 / 124	4.34 / 110	8.40 / 3.80
1-1/2 / 40	7.39 / 188	4.00 / 102	8.84 / 225	4.88 / 124	4.34 / 110	8.60 / 3.90
2 / 50	7.99 / 203	4.75 / 121	9.35 / 237	4.88 / 124	4.34 / 110	9.90 / 4.50

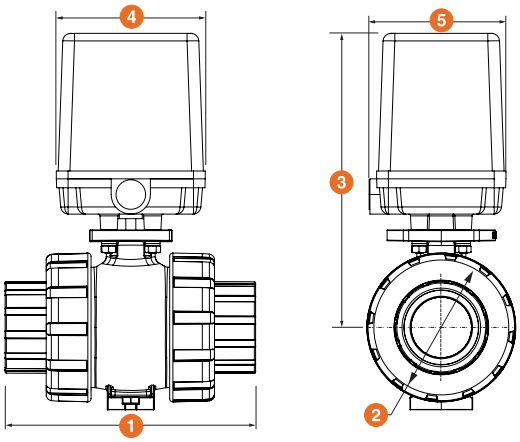

Dimensions are subject to change without notice – consult factory for installation information

ACTUATOR SPECIFICATIONS

MODEL	EAU
Torque Output (in-lbs)	120
Standard Voltage	120 VAC
Duty Cycle	25%
Thermal Overload	Standard
Cycle Time (secs*)	2.5 / 5.0
Conduit Entry	1/2" NPT
Enclosure	NEMA 4 / 4X
Enclosure Material	GFPP
Max Current Amps @ 115 VAC	1.8 (60 Hz), 2.8 (50 Hz)

* EAU28 = 180° (5.0 sec), , EAU29 = 90° (2.5 sec.)

VALVE SPECIFICATIONS

VALVE TYPE	TRUE UNION
Material of Construction	PVC, CPVC
Seals	FPM/EPDM
Seats	PTFE
End Connections	Socket or Threaded
Sizes	1/2", 3/4", 1", 1-1/4" 1-1/2" and 2"
Pressure Rating	250 PSI @ 70°F non-shock
Design	Full Port

Cv VALUES

SIZE in / DN	Cv VALUES	SIZE in / DN	Cv VALUES
1/2 / 15	8.0	1-1/4 / 32	75.0
3/4 / 20	16.0	1-1/2 / 40	90.0
1 / 25	29.0	2 / 50	150.0

PRESSURE LOSS CALCULATION FORMULA

$$\Delta P = \left[\frac{Q}{Cv}\right]^2$$

ΔP = Pressure Drop

Q = Flow in GPM

Cv = Flow Coefficient

Hayward is a registered trademark of Hayward Industries, Inc.
© 2020 Hayward Industries, Inc.

USA: 1.888.429.4635 • Fax: 1.888.778.8410 • One Hayward Industrial Drive • Clemmons, NC 27012 • Email: hfcsales@hayward.com
Canada: 1.888.238.7665 • Fax: 1.905.829.3636 • 2880 Plymouth Drive • Oakville, ON L6H 5R4 • Email: hflowcanada@hayward.com
Visit us at: haywardflowcontrol.com

PM Series Automated TBH True Union Ball Valves

1/2" TO 2" PVC AND CPVC

MANUAL OVERRIDE

SAFE

VALVE FEATURES

- System2™ Sealing Technology provides longer cycle life
- 250 PSI / 16 Bar, non-shock at 70°F / 23°C full pressure rating
- Consistent operating torque with adjustment-free design
- Lockout/Tagout mechanism that secures directly to valve body for enhanced safety
- Ergonomic handle for improved grip and comfort
- ISO mounting flange simplifies actuation
- Permanent markings, eliminates labels
- Integral footpad for skid or panel mount
- FPM or EPDM seals
- Double O-Ring stem seals
- Reversible PTFE seats – Standard
- Easy replacement for existing Hayward TB Series
- NSF / ANSI 61 and NSF / ANSI 372 Listed

ACTUATOR FEATURES

- Corrosion-Resistant Thermoplastic Housing
- Permanently Lubricated Rack and Pinion
- Manual Override
- Two-Piston Rack and Pinion Design
- Namur Compliant Accessory Mount
- Position Indicator
- Lightweight
- Air-to-Air (Double Acting) or Spring Return (Single Acting)

MATERIALS

- PVC Cell Class 12454 per ASTM D1784
- CPVC Cell Class 23447 per ASTM D1784
- FPM and EPDM O-Ring Seals

TECHNICAL INFORMATION

SPECIFICATIONS

SIZE	MATERIAL	END CONNECTION	SEALS	PRESSURE RATING
1/2" – 2" (DN15 – DN50)	PVC or CPVC	Socket and Threaded	FPM or EPDM	250 PSI @ 70°F 16 Bar @ 21°C Non-Shock

* PVC and CPVC socket ends available to ISO 727-1 and threaded ends to BS21.

TECHNICAL INFORMATION, *CONTINUED*

DIMENSIONS

SIZE in / DN	1 in / mm	2 in / mm	3 in / mm	4 in / mm	5 in / mm
SPRING RETURN (PMS)					
1/2 / 15	4.65 / 118	2.25 / 57	6.13 / 156	6.30 / 160	3.39 / 86
3/4 / 20	4.79 / 122	2.63 / 67	6.29 / 160	6.30 / 160	3.39 / 86
1 / 25	5.39 / 136	3.00 / 76	6.55 / 167	6.30 / 160	3.39 / 86
1-1/4 / 32	6.83 / 174	4.00 / 102	6.98 / 178	6.30 / 160	3.39 / 86
1-1/2 / 40	7.39/ 188	4.00 / 102	6.98 / 178	6.30 / 160	3.39 / 86
2 / 50	8.00 / 203	4.75 / 121	7.98 / 190	6.30 / 160	3.39 / 86
DOUBLE ACTING (PMD)					
1/2 / 15	4.65 / 118	2.25 / 57	5.39 / 136	4.69 / 119	2.64 / 67
3/4 / 20	4.79 / 122	2.63 / 67	5.50 / 140	4.69 / 119	2.64 / 67
1 / 25	5.39 / 136	3.00 / 76	5.76 / 147	4.69 / 119	2.64 / 67
1-1/4 / 32	6.83 / 174	4.00 / 102	6.19 / 158	4.69 / 119	2.64 / 67
1-1/2 / 40	7.39/ 188	4.00 / 102	6.19 / 158	4.69 / 119	2.64 / 67
2 / 50	8.00 / 203	4.75 / 121	6.69 / 170	4.69 / 119	2.64 / 67

Dimensions are subject to change without notice – consult factory for installation information

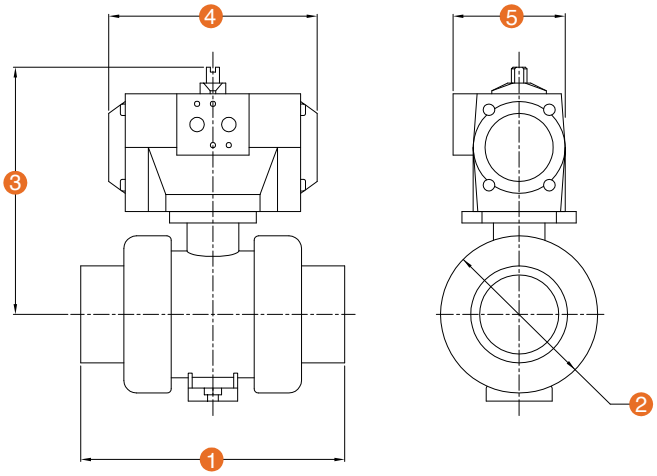

ACTUATOR SPECIFICATIONS

MODEL	PMD15	MODEL	PMS15 (FAIL CLOSED STANDARD)
Torque Output (in-lbs) @ 80 PSI	275	Torque Output (in-lbs) @ End of Spring Return	107
Enclosure Material	Polyamide	Enclosure Material	Polyamide
Output Shaft	Carbon Steel	Output Shaft	Carbon Steel
Air Port Connections	1/4" NPT	Air Port Connections	1/4" NPT
Air Consumption (cu. in.)	13.5	Air Consumption (cu. in.)	10.8
Air Transfer	Internal	Air Transfer	Internal
Stroke Time (seconds)	.5	Stroke Time (seconds)	.5
Cycle Time	1/2 Second	Cycle Time	1/2 Second
Minimum Air Pressure	80 PSI	Minimum Air Pressure	80 PSI
Maximum Air Pressure	120 PSI	Maximum Air Pressure	120 PSI
Operation	Rack and Pinion	Operation	Rack and Pinion
Weight (lbs / kg)	1.15 / .52	Weight (lbs / kg)	3.1 / 1.4

Cv VALUES

SIZE in / DN	Cv VALUES	SIZE in / DN	Cv VALUES
1/2 / 15	8.0	1-1/4 / 32	75.0
3/4 / 20	15.0	1-1/2 / 40	90.0
1 / 25	29.0	2 / 50	140.0

PRESSURE LOSS CALCULATION FORMULA

$$\Delta P = \left[\frac{Q}{Cv}\right]^2$$

ΔP = Pressure Drop

Q = Flow in GPM

Cv = Flow Coefficient

Hayward is a registered trademark of Hayward Industries, Inc.
© 2020 Hayward Industries, Inc.

USA: 1.888.429.4635 • Fax: 1.888.778.8410 • One Hayward Industrial Drive • Clemmons, NC 27012 • Email: hfcsales@hayward.com
Canada: 1.888.238.7665 • Fax: 1.905.829.3636 • 2880 Plymouth Drive • Oakville, ON L6H 5R4 • Email: hflowcanada@hayward.com
Visit us at: haywardflowcontrol.com

SV Series True Union Solenoid Valves

1/4" TO 1" PVC AND CPVC

1/2" TO 1" PVDF

KEY FEATURES

- Available in PVC, CPCV and NEW Natural PVDF
- Corrosion-Resistant Polyester Coil
- No Pressure Differential Required for Operation
- Both 1/2" Conduit or SJ-Type Cord Electrical Connection
- 120 VAC Standard
- Normally Closed Design

OPTIONS

- 12 VAC, 24 VAC, 220 VAC, 12 VDC, 24 VDC

OPERATING PARAMETERS

[1]For optimum valve performance, differential pressure must not exceed 90 psi.

[2]Flow velocity must not exceed 5 ft/sec

[3]Units are not to be operated 'on' continuously

[4]Maximum back pressure 25 psi.

MATERIALS

- PVC Cell Class 12454 per ASTM D1784
- CPVC Cell Class 23447 per ASTM D1784
- Natural PVDF per ASTM D3222 Type 1
- FPM and EPDM O-Ring Seals

TECHNICAL INFORMATION

EXPLODED VIEW

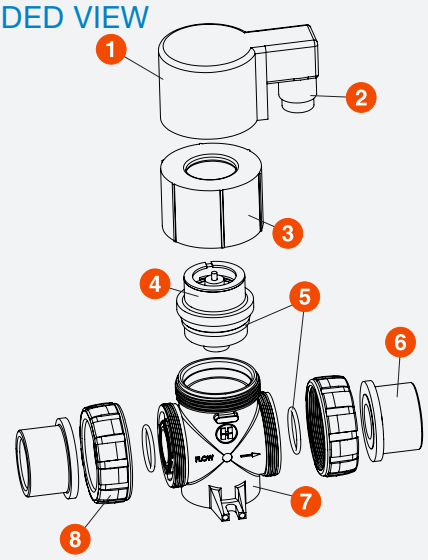

SELECTION CHART

SIZE	MATERIAL	END CONNECTION	SEALS	PRESSURE RATING
1/4" – 1" * (DN8 – DN25)	PVC or CPVC	Socket and Threaded	FPM or EPDM	150 PSI @ 70°F 10 Bar @ 21°C Non-Shock
1/2" – 1" * (DN15 – DN25)	PVDF	Socket Fusion and Threaded	FPM	

* PVC and CPVC socket ends available to ISO 727-1 and threaded ends to BS21.
For optimum performance, differential poressure must not exceed 90 psi across the valve.

TECHNICAL INFORMATION, *CONTINUED*

PARTS LIST

1. Solenoid Coil
2. Electrical Connector
3. Bonnet Nut
4. Seal Cartridge
5. O-Rings
6. End Connector
7. Body
8. Union Nut

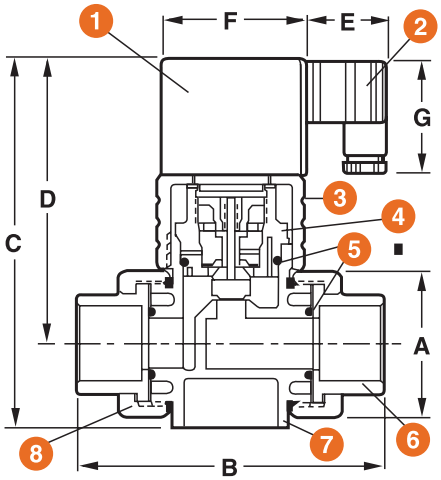

DIMENSIONS PVC, CPVC

SIZE in / DN	A in / mm	B in / mm	C in / mm	D in / mm	E in / mm	F in / mm	G in / mm	WEIGHT lbs / kg
1/4 / 8	2.25 / 57	5.30 / 135	6.30 / 160	4.60 / 117	1.60 / 41	2.60 / 66	2.00 / 51	2.79 / 1.27
1/2 / 15*	2.25 / 57	5.30 / 135	6.30 / 160	4.60 / 117	1.60 / 41	2.60 / 66	2.00 / 51	2.81 / 1.27
3/4 / 20*	2.63 / 67	5.50 / 140	6.60 / 168	5.10 / 130	1.60 / 41	2.60 / 66	2.00 / 51	3.01 / 1.37
1 / 25*	2.63 / 67	5.50 / 140	6.60 / 168	5.10 / 130	1.60 / 41	2.60 / 66	2.00 / 51	3.03 / 1.37

DIMENSIONS PVDF

SIZE in / DN	A in / mm	B in / mm	C in / mm	D in / mm	E in / mm	F in / mm	G in / mm	WEIGHT lbs / kg
1/2 / 15*	2.23 / 57	5.00 / 127	6.40 / 163	5.09 / 129	1.60 / 41	2.60 / 66	2.00 / 51	3.00 / 1.36
3/4 / 20*	2.60 / 66	5.44 / 138	6.61 / 168	5.13 / 130	1.60 / 41	2.60 / 66	2.00 / 51	3.20 / 1.45
1 / 25*	2.60 / 66	5.44 / 138	6.61 / 168	5.13 / 130	1.60 / 41	2.60 / 66	2.00 / 51	3.22 / 1.46

Dimensions are subject to change without notice – consult factory for installation information

* Metric End Connections Available In: BSP – Straight Thread, BSP TR – Tapered Thread and Metric Socket

Cv VALUES

SIZE in / DN	Cv VALUES
1/4 / 8	1.3
1/2 / 15	2.3
3/4 / 20	3.2
1 / 25	3.8

PRESSURE LOSS CALCULATION FORMULA

$$\Delta P = \left[\frac{Q}{Cv}\right]^2$$

ΔP = Pressure Drop

Q = Flow in GPM

Cv = Flow Coefficient

OPERATING TEMPERATURE/PRESSURE

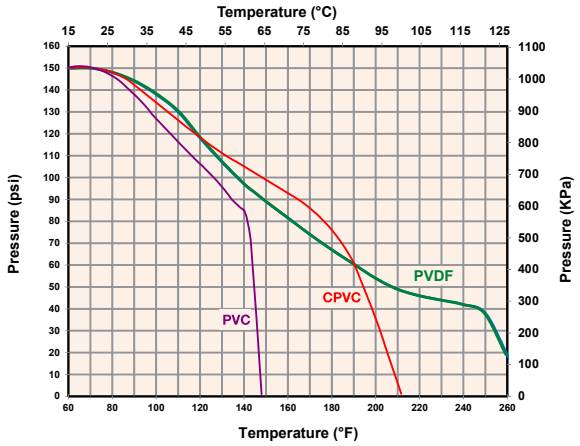

Hayward is a registered trademark of Hayward Industries, Inc.
© 2020 Hayward Industries, Inc.

USA: 1.888.429.4635 • Fax: 1.888.778.8410 • One Hayward Industrial Drive • Clemmons, NC 27012 • Email: hfcsales@hayward.com
Canada: 1.888.238.7665 • Fax: 1.905.829.3636 • 2880 Plymouth Drive • Oakville, ON L6H 5R4 • Email: hflowcanada@hayward.com
Visit us at: haywardflowcontrol.com

LHB Series Manual Limit Switch

FOR BALL VALVES UP TO 6" AND BUTTERFLY VALVES UP TO 8"

Example of LHB mounted to valve.
Valve not included.

KEY FEATURES

- Remote Monitoring of Critical Services
- Retrofits to Existing Valves
- Robust GFPP Body, Cover and Plate
- 304 Stainless Steel Stem and FPM Seals
- Fits All Hayward® Ball Valves up to 6" and Butterfly Valves up to 8"
- Available with "Dead-Man" Spring Return Handle or Handlever (LHB-SR)
- Two Adjustable SPDT 10 Amp at 120 VAC Switches (Open/Close Position)
- 1/2" Conduit Port
- Terminal Blocks for Ease of Wiring
- Meets ISO5211, F05, F07 and F10 Patterns
- NEMA 4X
- Switches CSA Listed

OPTIONS

- Additional Two Switches
- Optional Handles – Lever or T-Handle

TECHNICAL INFORMATION

EXPLODED VIEW

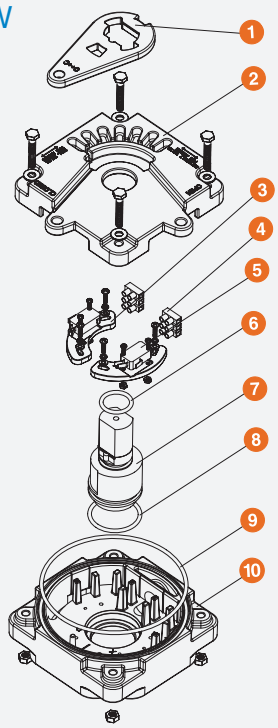

SELECTION CHART

MANUAL LIMIT SWITCH MODEL	VALVE SIZE/SERIES
LHB-1	1/2" – 2" TB / TBH (DN15 – DN50) 1-1/2" – 4" BYV (DN40 – DN100)
LHB-2	2-1/2" – 6" TB / TBH (DN65 – DN150) 6" – 8" BYV (DN150 – DN200)
LHB-1-SR	1/2" – 2" TB (DN15 – DN50)
LHB-2-SR	2-1/2" – 6" TB (DN65 – DN150)

Pat. No's.: 9,010,721; and 9,0101, 722; 9, 702,480

TECHNICAL INFORMATION, *CONTINUED*

PARTS LIST

1. Lock Plate
2. Cover
3. Adjustment Plate
4. Terminal Block
5. Switch
6. Upper Shaft O-Ring
7. Shaft
8. Lower Shaft O-Ring
9. Body O-Ring
10. Body

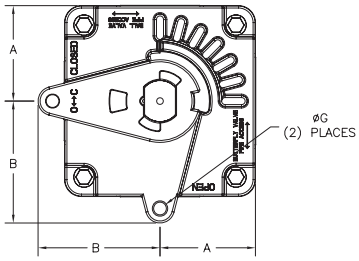

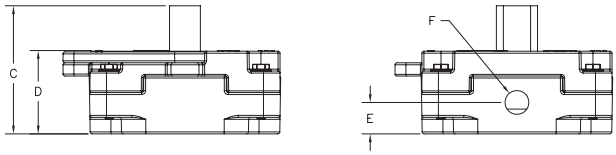

LHB

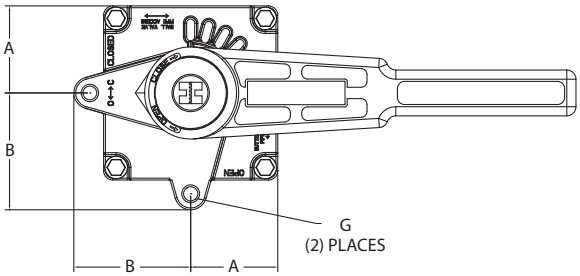

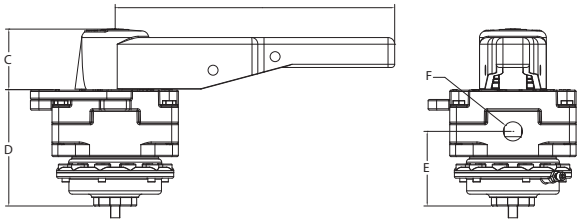

LHB-SR

DIMENSIONS

MANUAL LIMIT SWITCH MODEL	VALVE SIZE/SERIES	A in / mm	B in / mm	C in / mm	D in / mm	E in / mm	F in	G in / mm
LHB-1	1/2" – 2" TB / TBH 1-1/2" – 4" BYV	2.38 / 60	3.19 / 81	3.88 / 99	2.52 / 64	.95 / 24	1/2" NPT	.38 / 10
LHB-2	2 -1/2" – 6" TB / TBH 6" and 8" BYV	2.89 / 73	3.69 / 94	3.88 / 99	2.52 / 64	.95 / 24	1/2" NPT	.38 / 10
LHB1-SR	1/2" – 2" TB / TBH	2.38 / 61	3.19 / 81	2.28 / 60	4.38 / 112	2.81 / 71	1/2" NPT	.38 / 10
LHB2-SR	2-1/2" – 6" TB / TBH	2.89 / 73	3.69 / 94	2.28 / 60	2.52 / 64	112 / 71	1/2" NPT	.38 / 10

Dimensions are subject to change without notice – consult factory for installation information

Hayward is a registered trademark
of Hayward Industries, Inc.
© 2020 Hayward Industries, Inc.

USA: 1.888.429.4635 • Fax: 1.888.778.8410 • One Hayward Industrial Drive • Clemmons, NC 27012 • Email: hfcsales@hayward.com
Canada: 1.888.238.7665 • Fax: 1.905.829.3636 • 2880 Plymouth Drive • Oakville, ON L6H 5R4 • Email: hflowcanada@hayward.com
Visit us at: haywardflowcontrol.com

12/24VAC/VDC ON/OFF

HRSN2

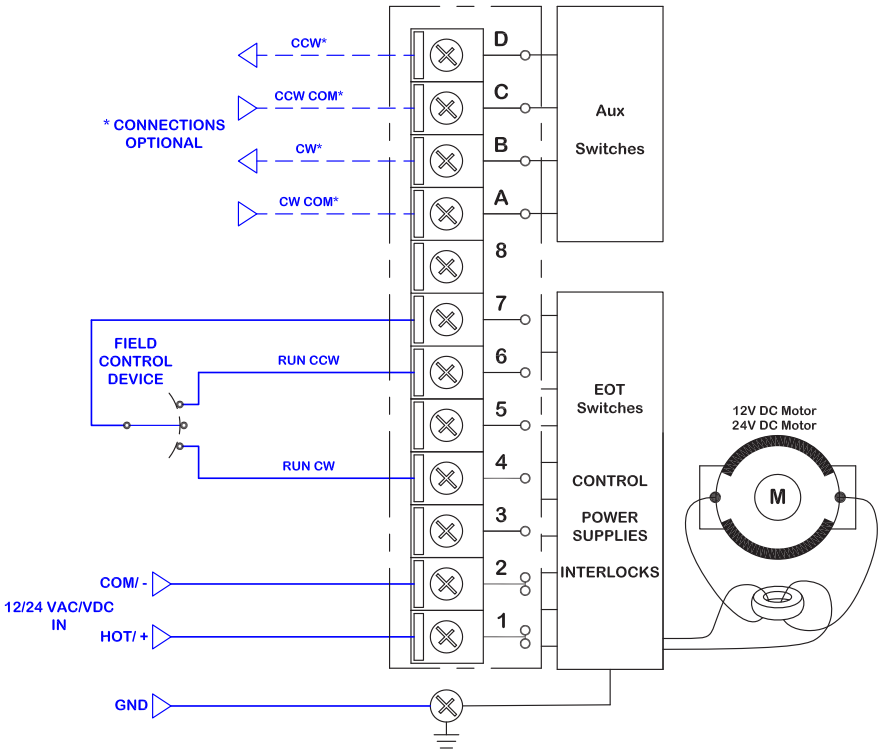

120/230VAC ON/OFF

HRSN2

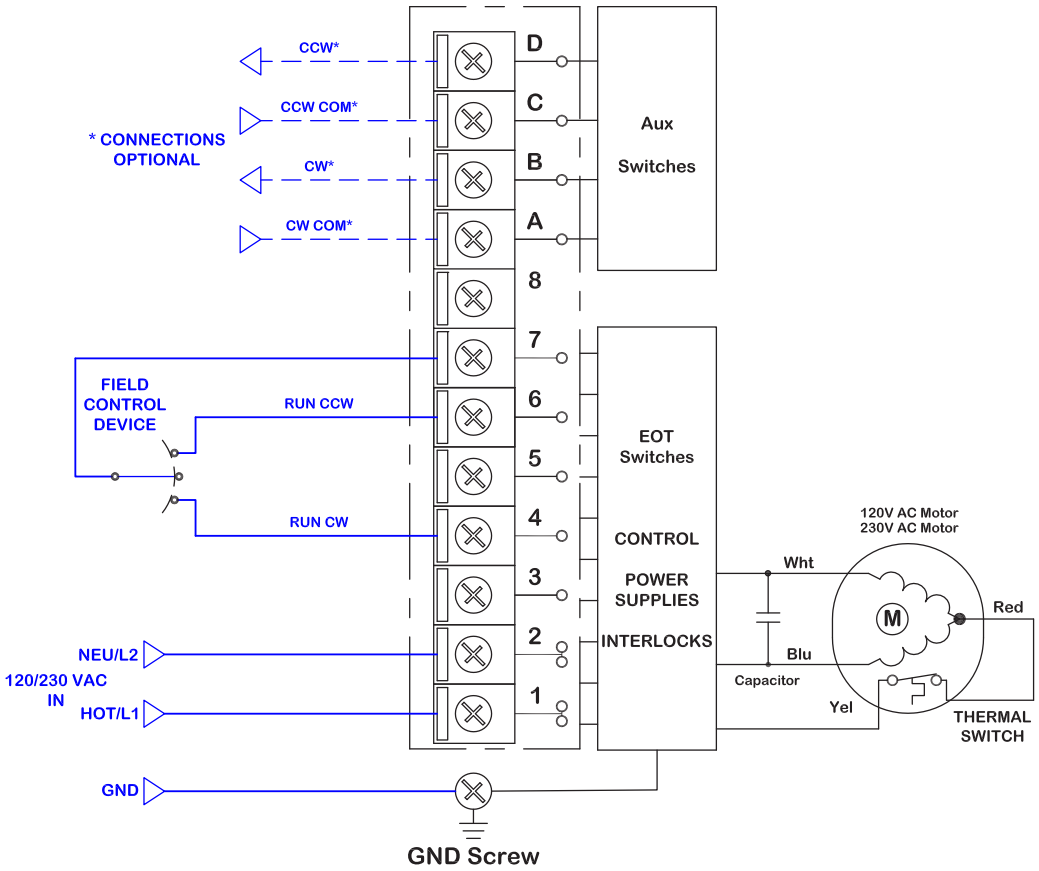

12/24VAC/VDC MOD

HRSN2

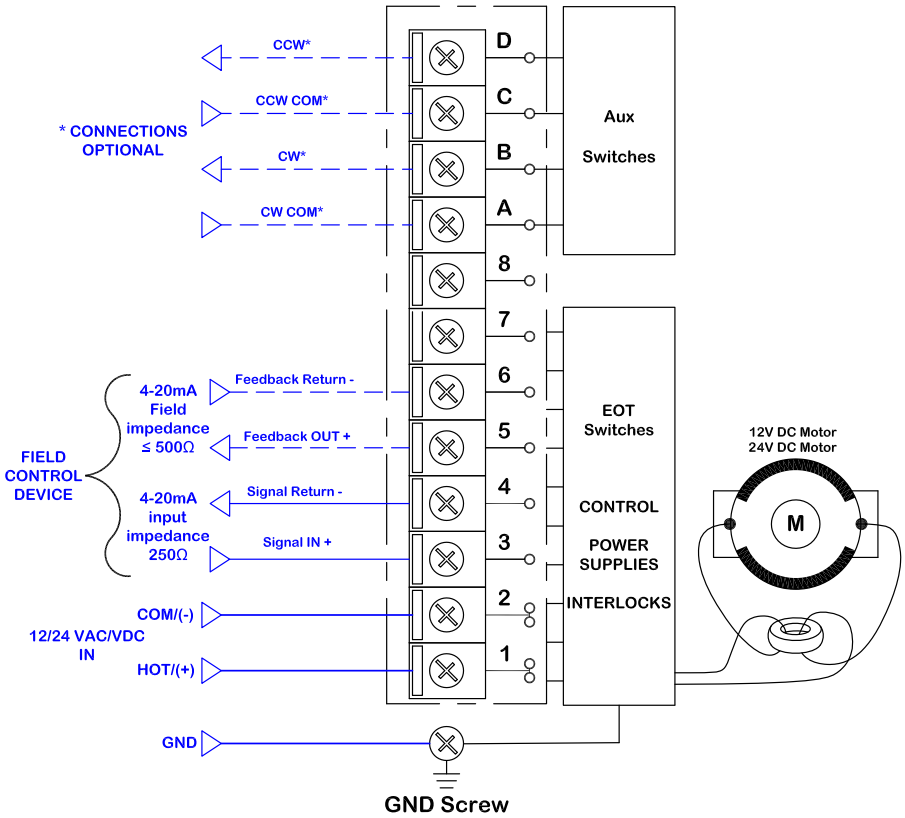

120/230VAC MOD

HRSN2

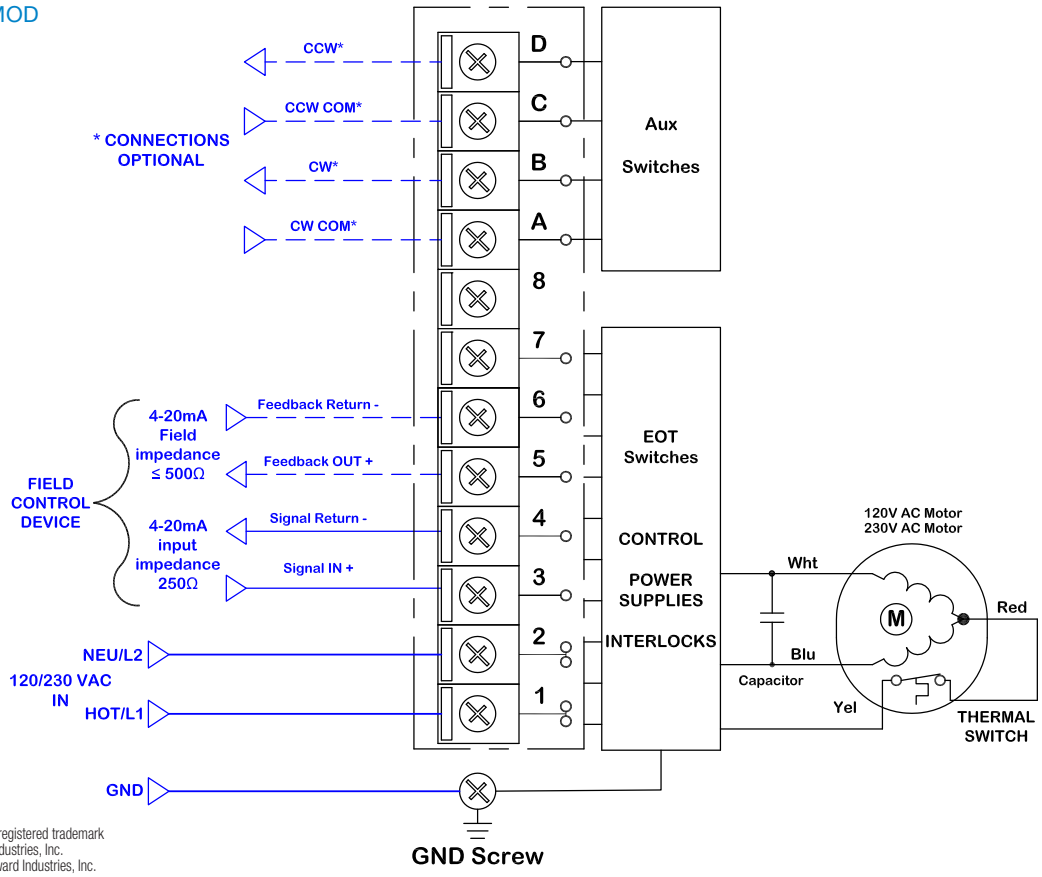

Hayward is a registered trademark of Hayward Industries, Inc.
© 2020 Hayward Industries, Inc.

USA: 1.888.429.4635 • Fax: 1.888.778.8410 • One Hayward Industrial Drive • Clemmons, NC 27012 • Email: hfcsales@hayward.com
Canada: 1.888.238.7665 • Fax: 1.905.829.3636 • 2880 Plymouth Drive • Oakville, ON L6H 5R4 • Email: hflowcanada@hayward.com
Visit us at: haywardflowcontrol.com

12/24VAC/VDC ON/OFF

HRSN3A~4D

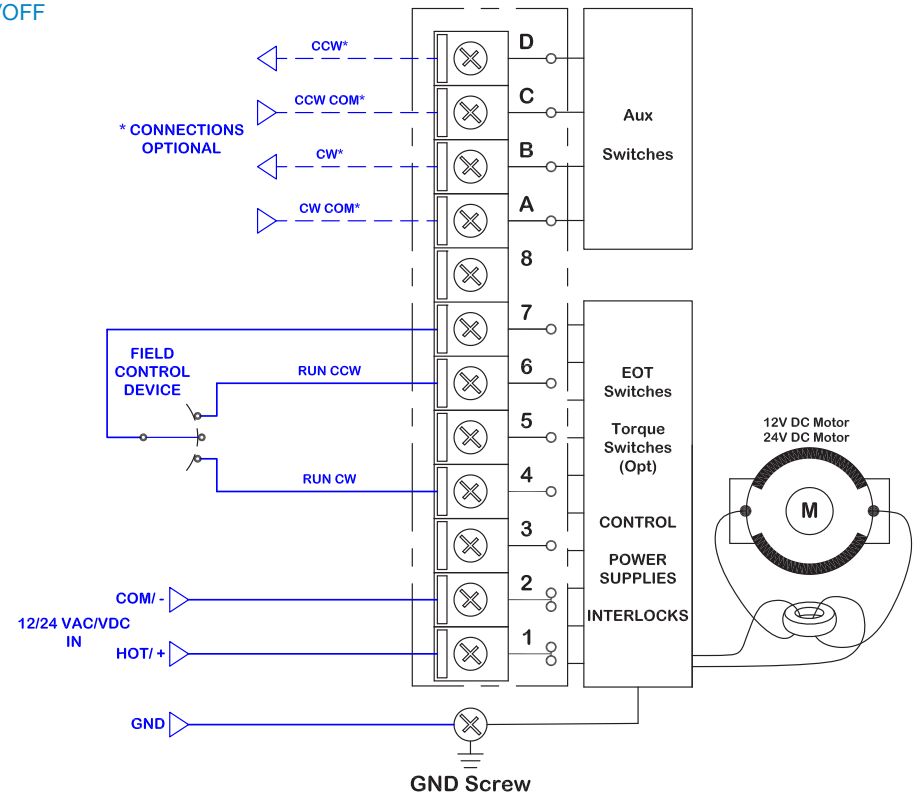

120/230VAC ON/OFF

HRSN3A~4D

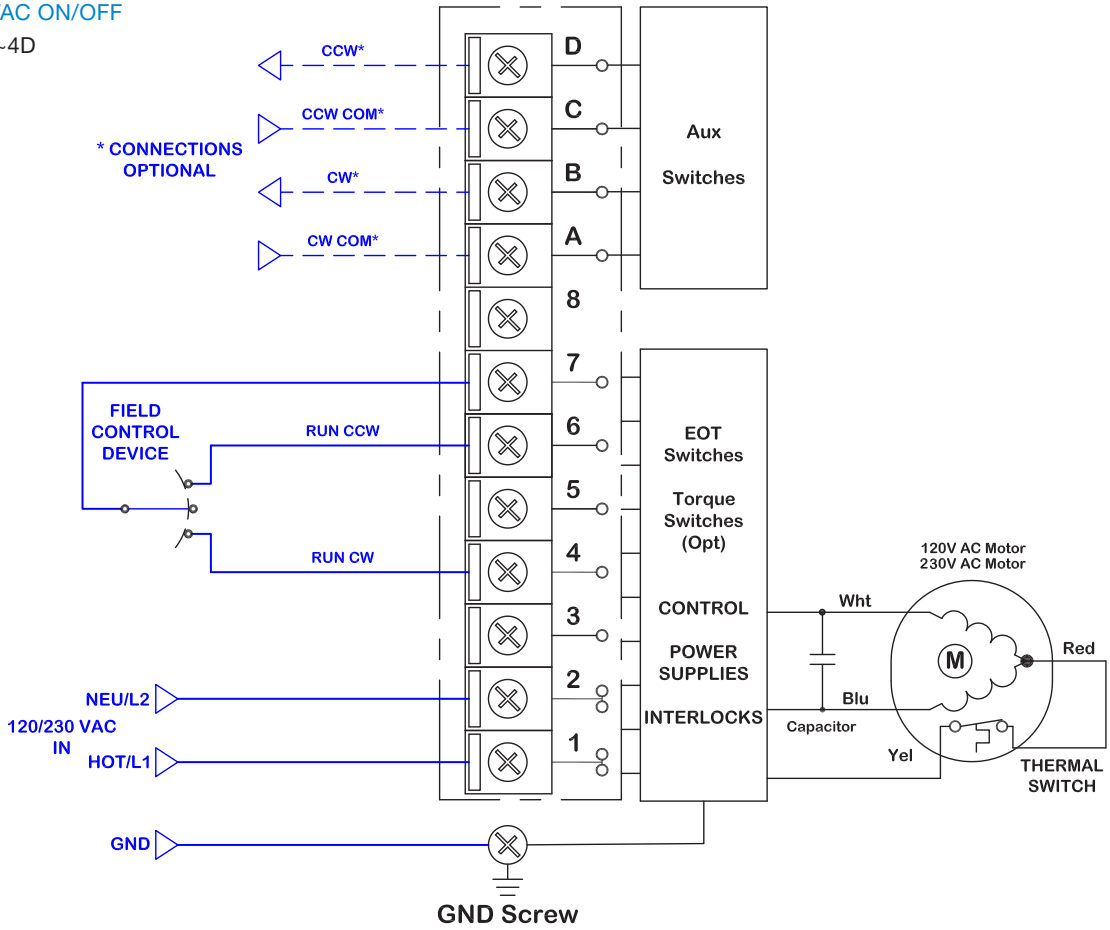

12/24VAC/VDC MOD

HRSN3A~4D

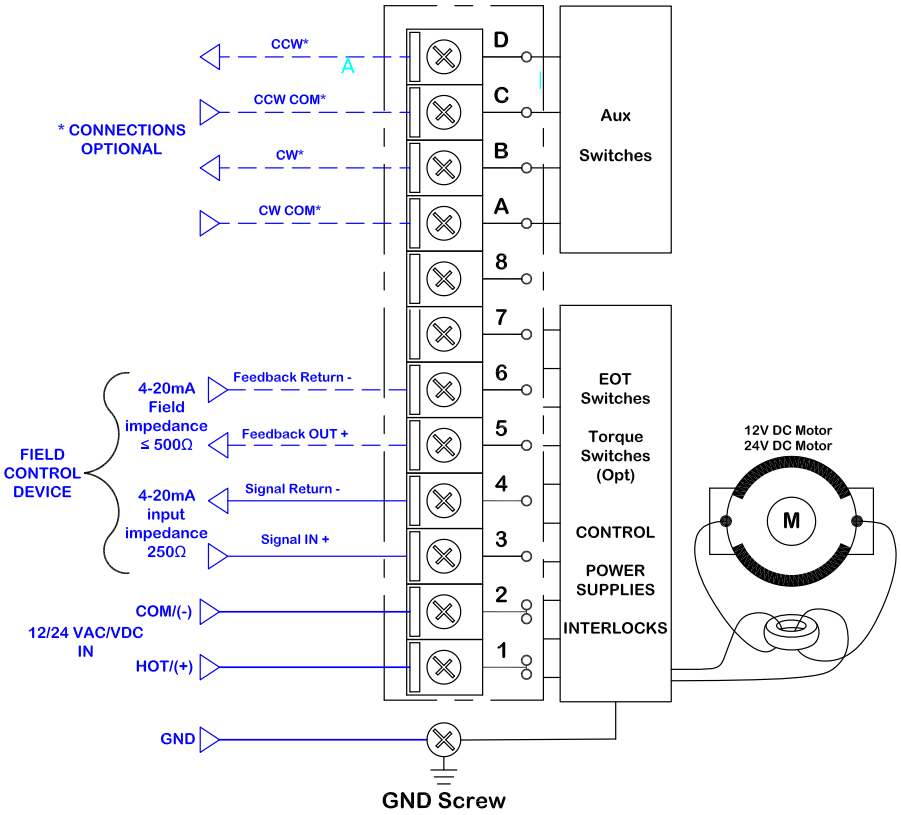

120/230VAC MOD

HRSN3A~4D

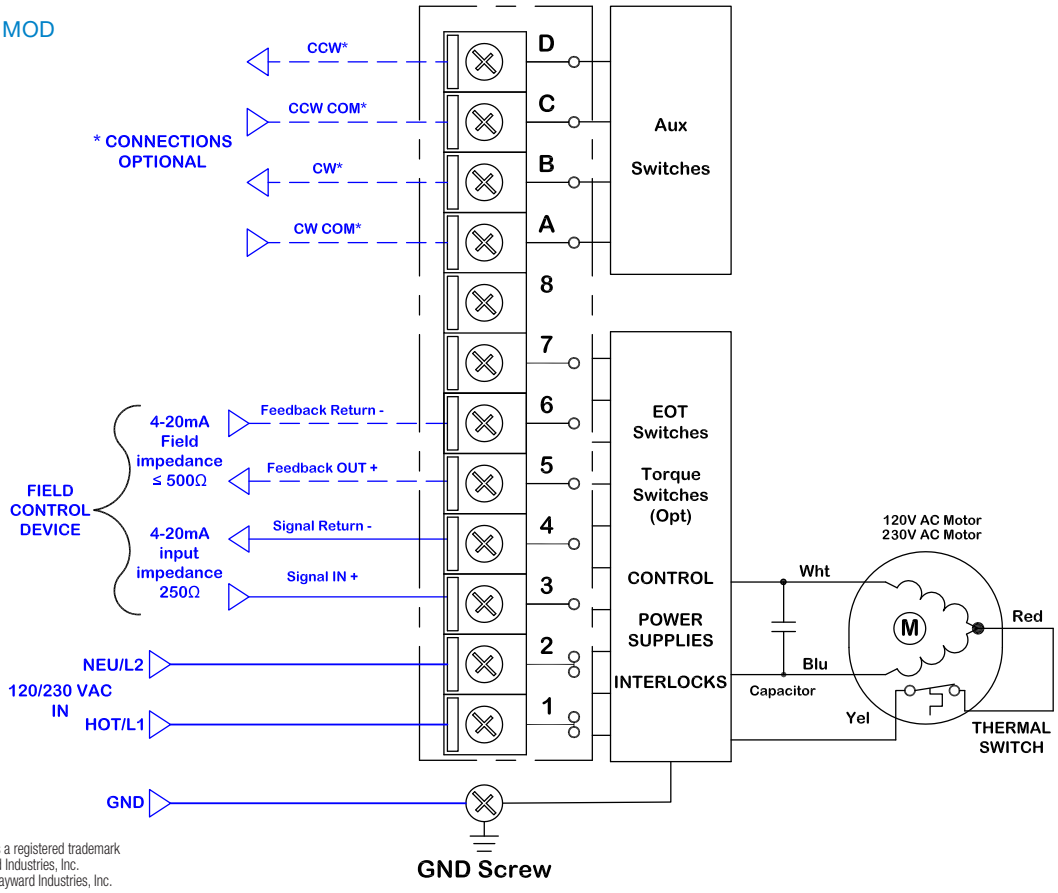

Hayward is a registered trademark of Hayward Industries, Inc.
© 2020 Hayward Industries, Inc.

USA: 1.888.429.4635 • Fax: 1.888.778.8410 • One Hayward Industrial Drive • Clemmons, NC 27012 • Email: hfcsales@hayward.com
Canada: 1.888.238.7665 • Fax: 1.905.829.3636 • 2880 Plymouth Drive • Oakville, ON L6H 5R4 • Email: hflowcanada@hayward.com
Visit us at: haywardflowcontrol.com

230-575/3 BASIC 3-PHASE (NO MOTOR CONTROL)

HRSN3A~4D

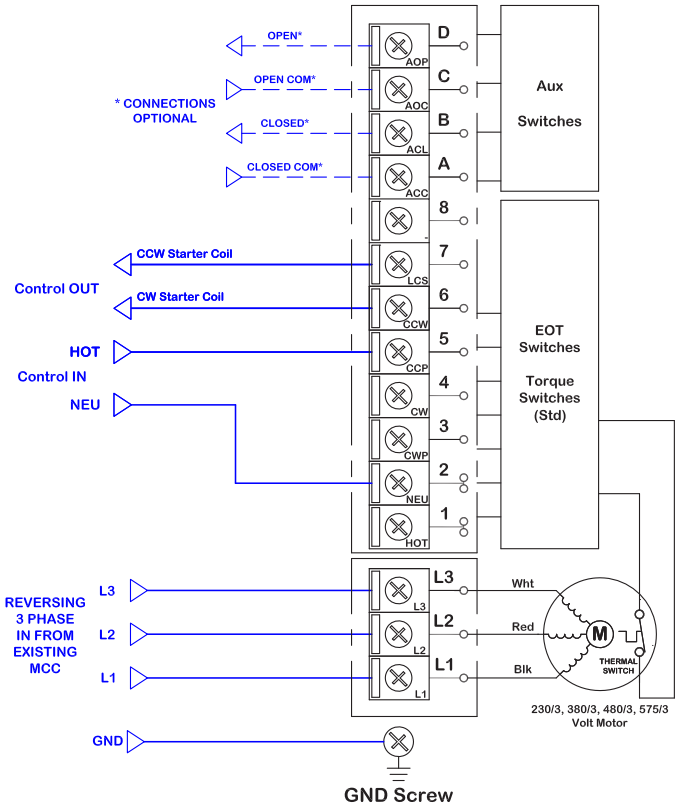

230-480/3 ON/OFF 3-PHASE (NON-LCS)

HRSN3A~4D

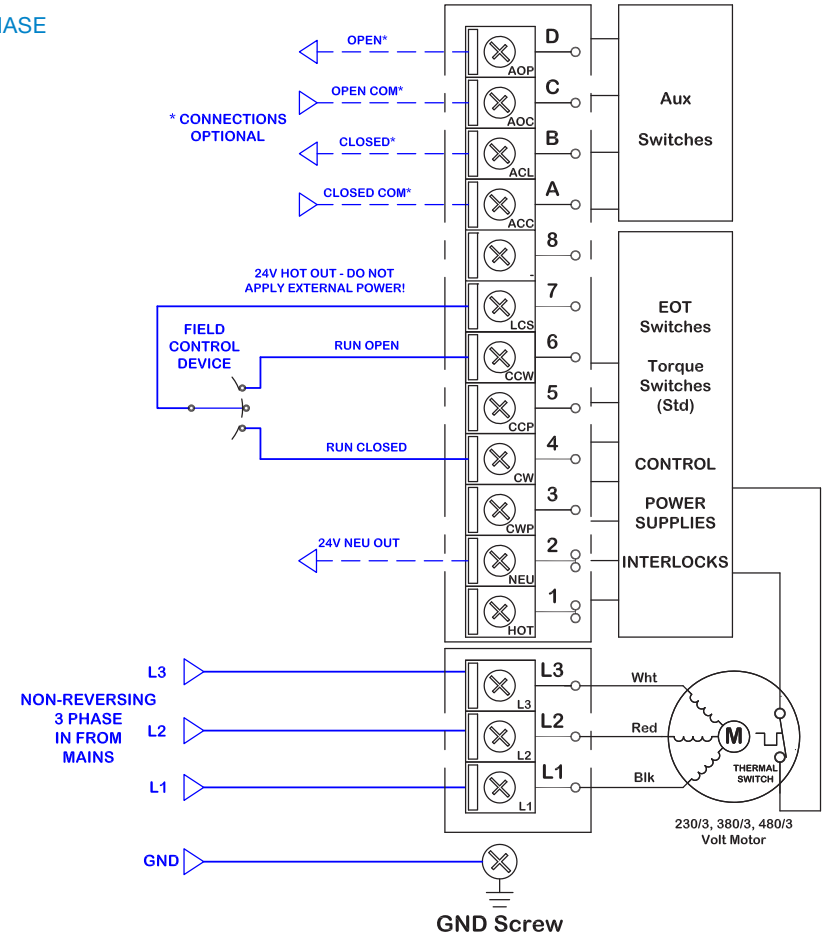

230-480/3 MOD 3-PHASE
(NON-LCS)
HRSN3A~4D

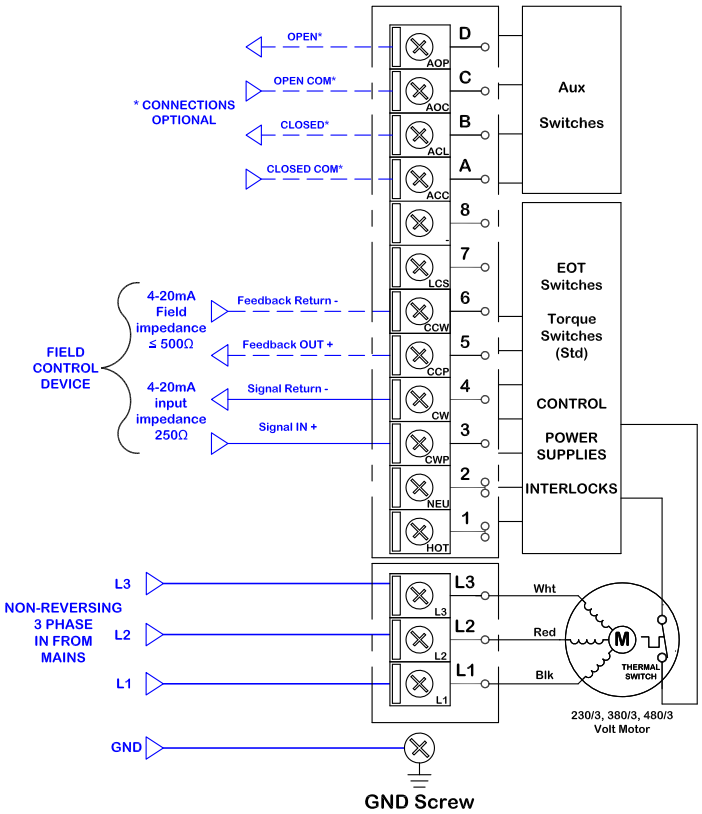

Hayward is a registered trademark
of Hayward Industries, Inc.
© 2020 Hayward Industries, Inc.

USA: 1.888.429.4635 • Fax: 1.888.778.8410 • One Hayward Industrial Drive • Clemmons, NC 27012 • Email: hfcsales@hayward.com
Canada: 1.888.238.7665 • Fax: 1.905.829.3636 • 2880 Plymouth Drive • Oakville, ON L6H 5R4 • Email: hflowcanada@hayward.com
Visit us at: haywardflowcontrol.com

12/24VAC/VDC ON/OFF

HRCK/CB2

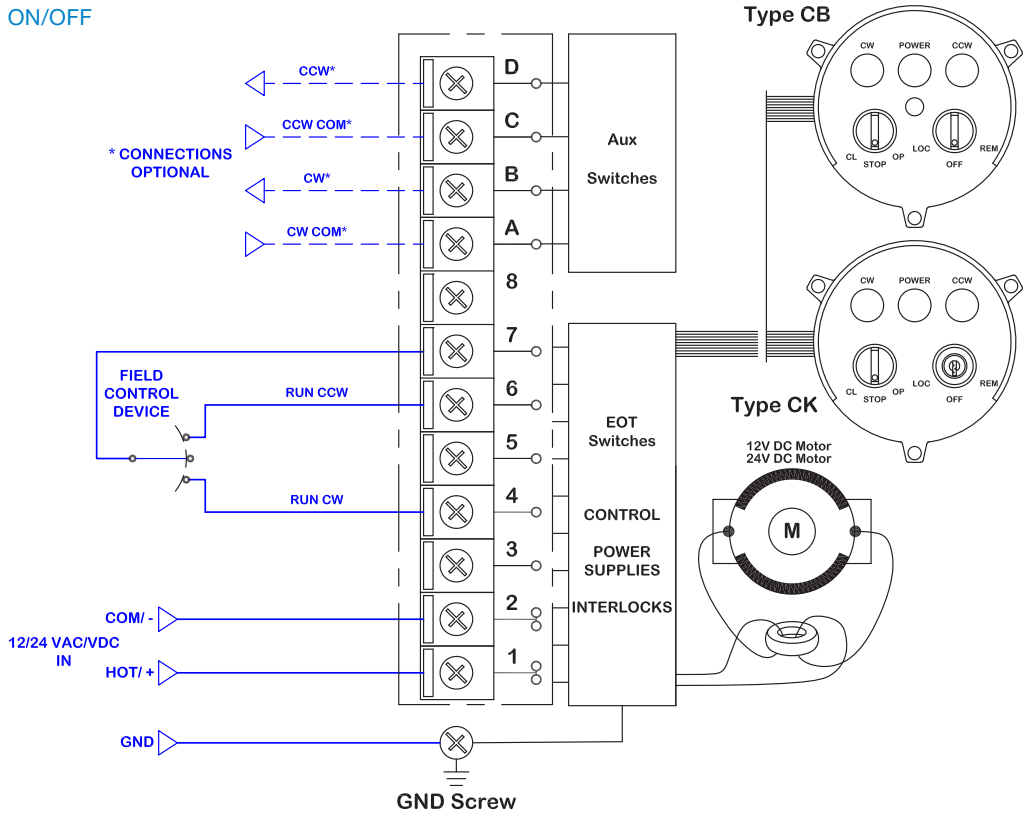

120/230VAC ON/OFF

HRCK/CB2

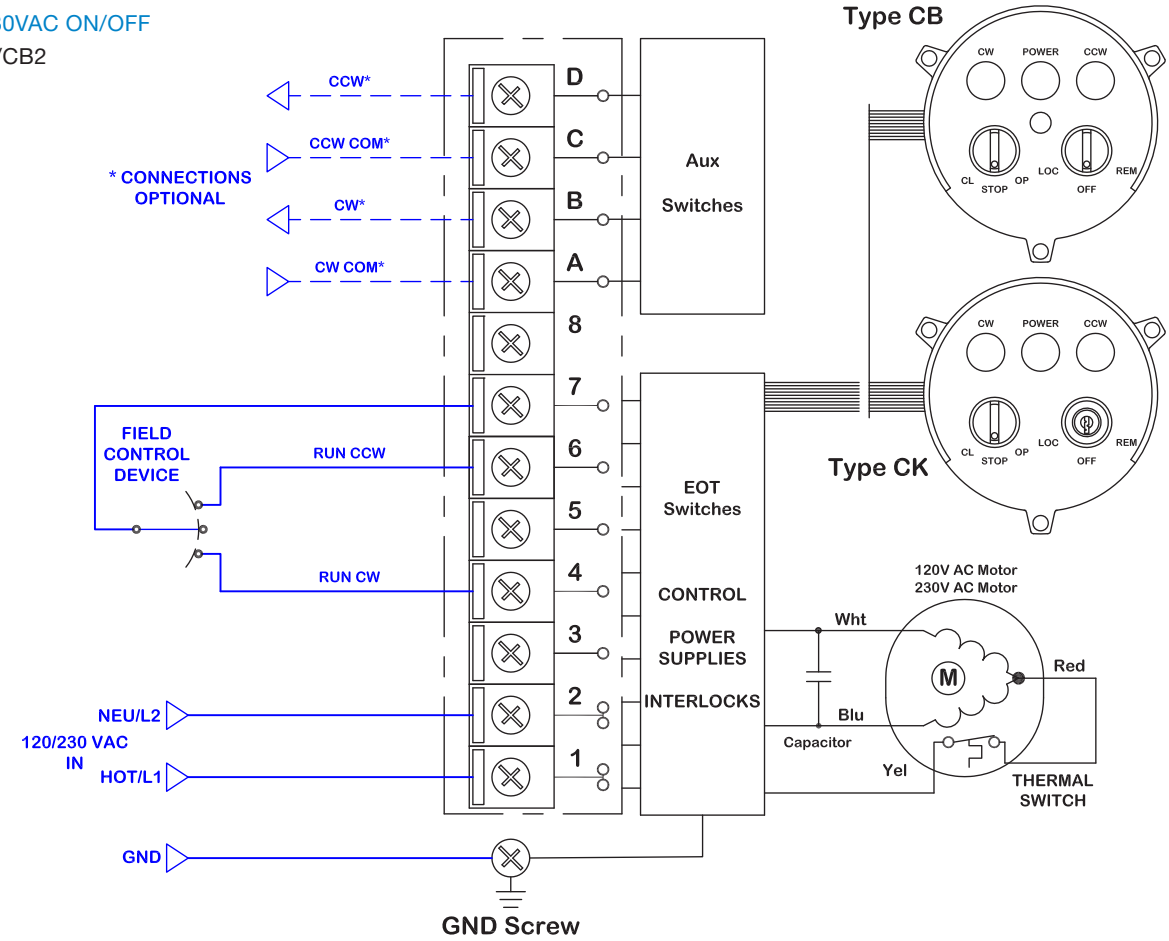

12/24VAC/VDC MOD

HRCK/CB2

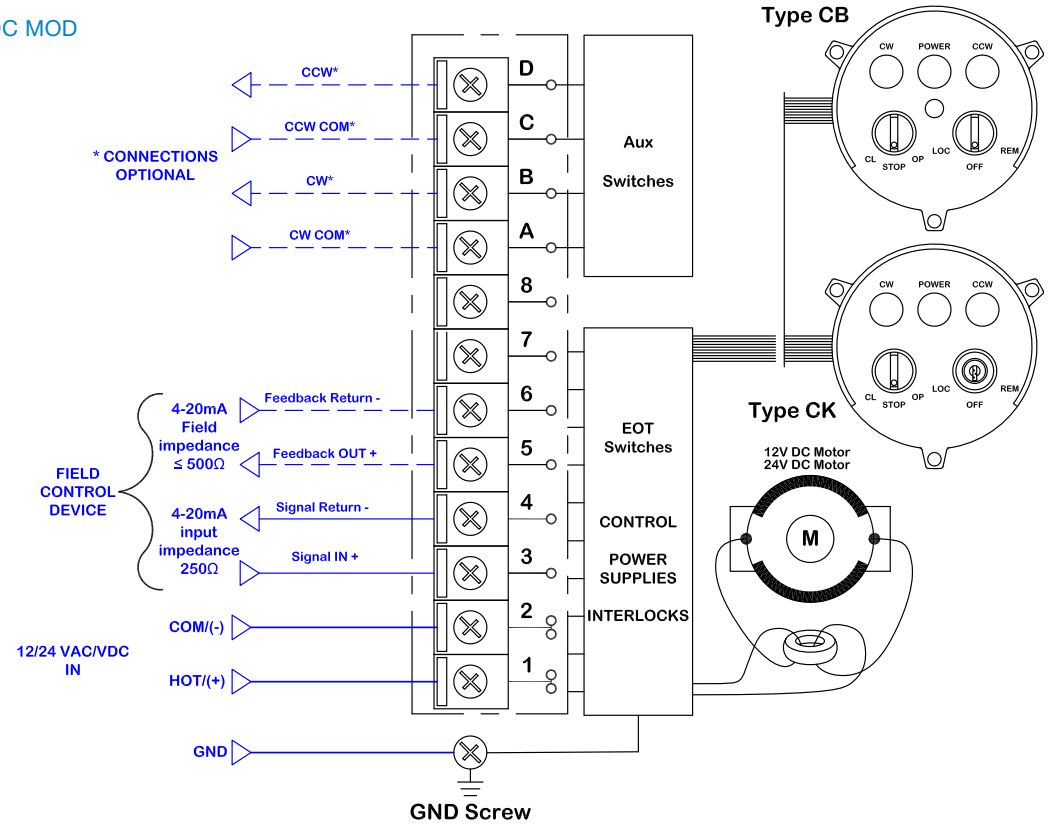

120/230VAC MOD

HRCK/CB2

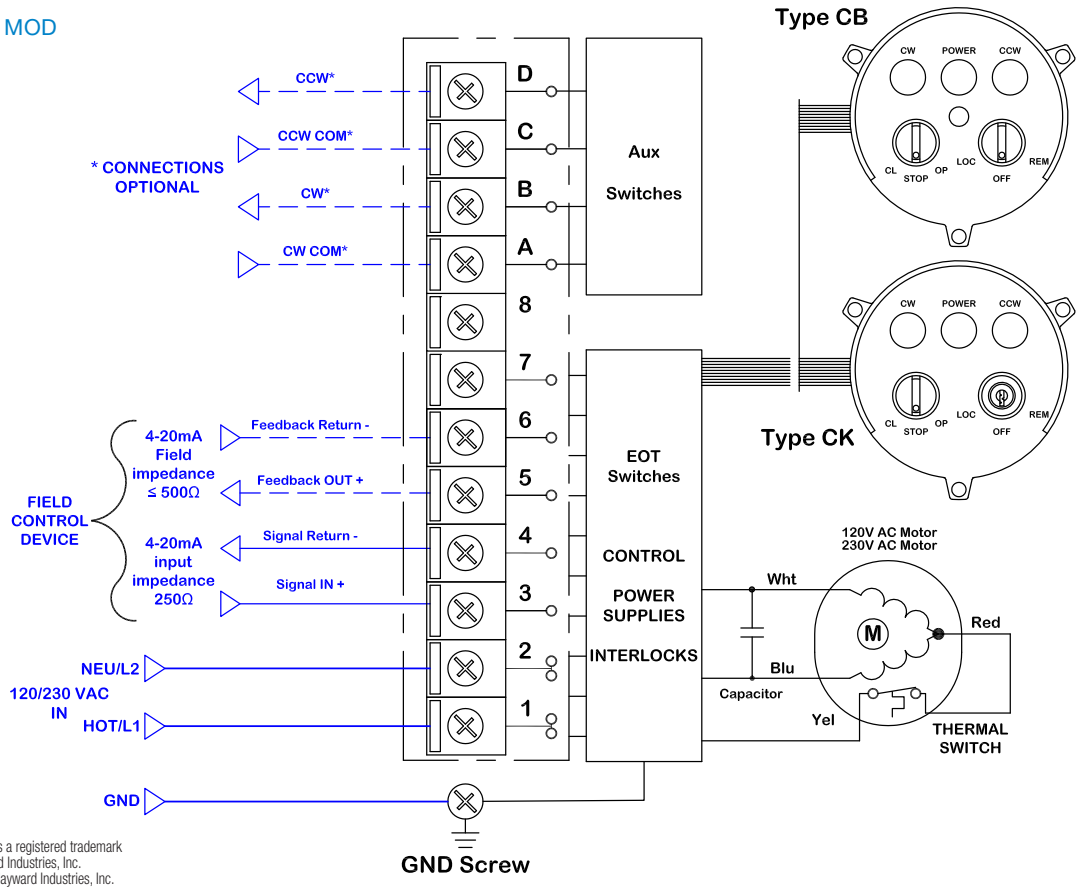

Hayward is a registered trademark of Hayward Industries, Inc.
© 2020 Hayward Industries, Inc.

USA: 1.888.429.4635 • Fax: 1.888.778.8410 • One Hayward Industrial Drive • Clemmons, NC 27012 • Email: hfcsales@hayward.com
Canada: 1.888.238.7665 • Fax: 1.905.829.3636 • 2880 Plymouth Drive • Oakville, ON L6H 5R4 • Email: hflowcanada@hayward.com
Visit us at: haywardflowcontrol.com

12/24VAC/VDC ON/OFF

HRCK/CB3A~4D

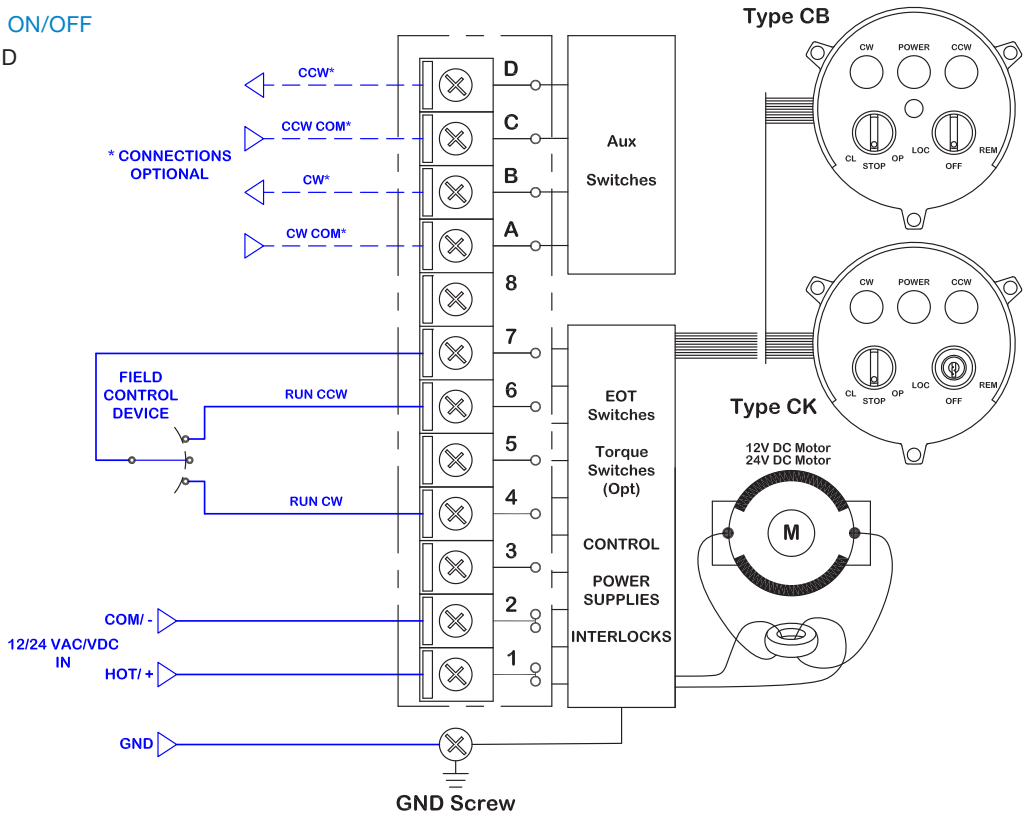

120/230VAC ON/OFF

HRCK/CB3A~4D

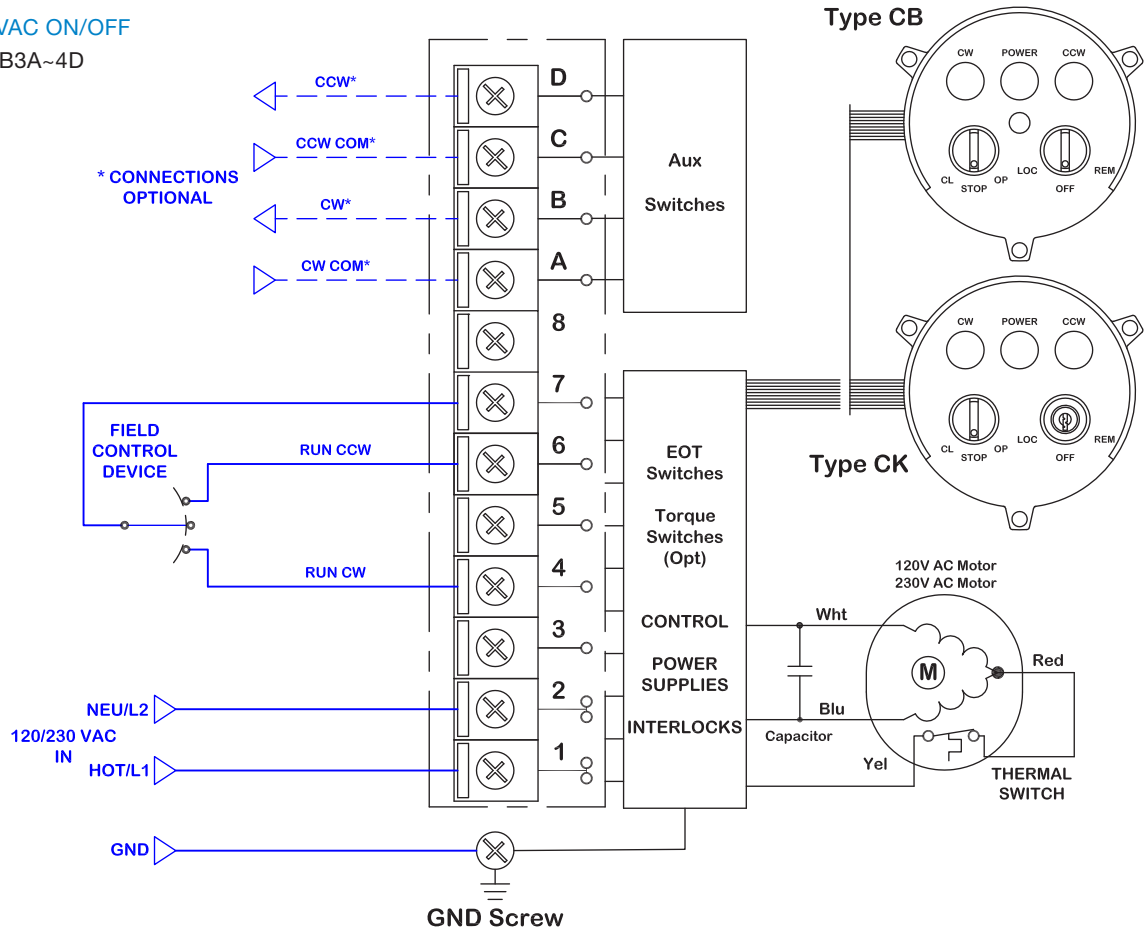

12/24VAC/VDC MOD

HRCK/CB3A~4D

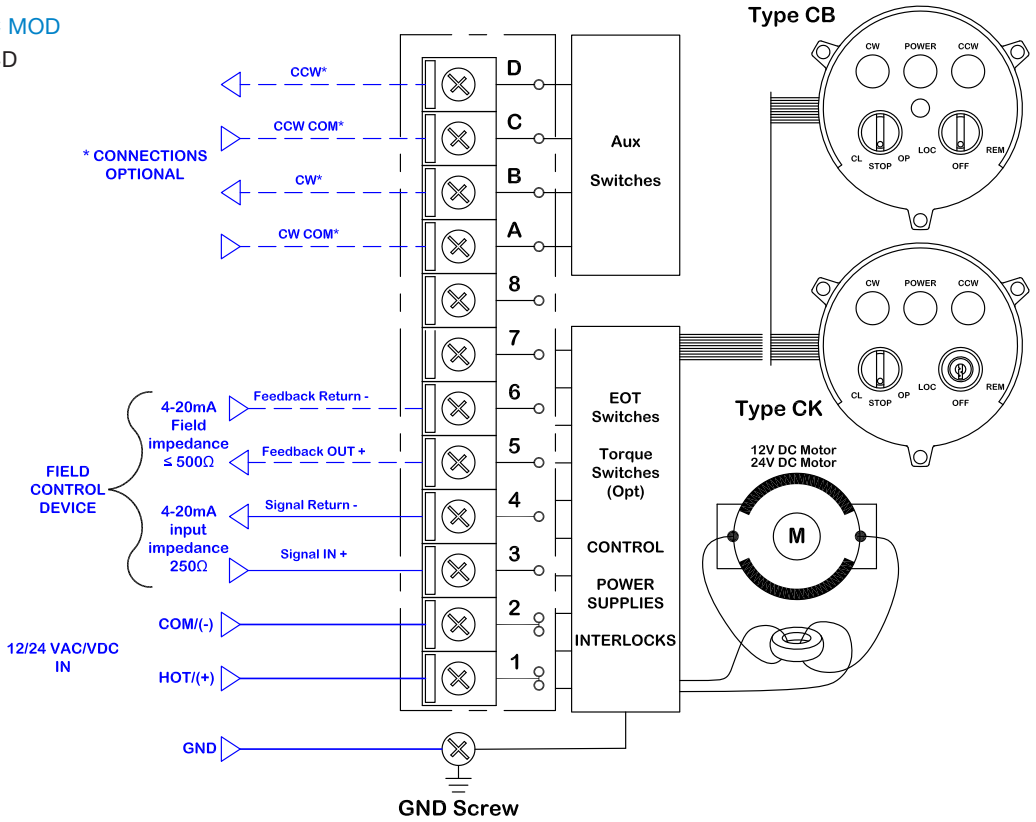

120/230VAC MOD

HRCK/CB3A~4D

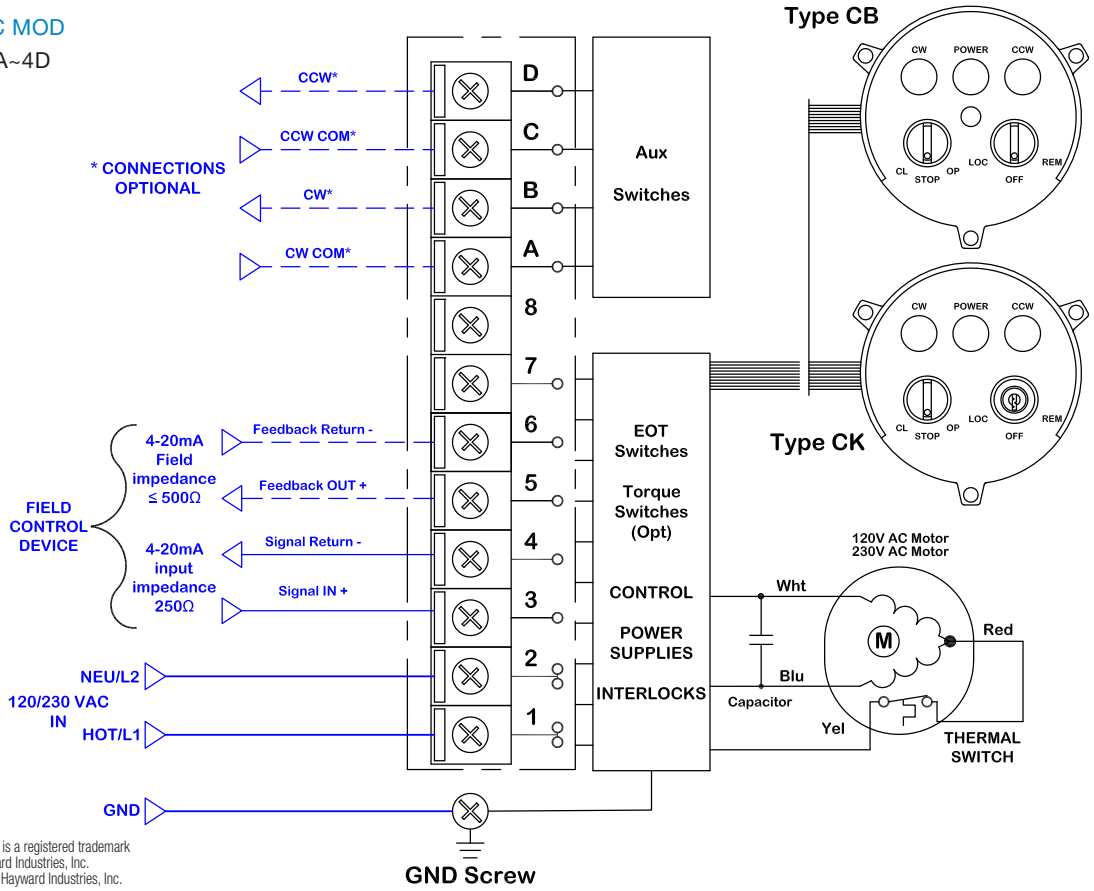

Hayward is a registered trademark of Hayward Industries, Inc.
© 2020 Hayward Industries, Inc.

USA: 1.888.429.4635 • Fax: 1.888.778.8410 • One Hayward Industrial Drive • Clemmons, NC 27012 • Email: hfcsales@hayward.com
Canada: 1.888.238.7665 • Fax: 1.905.829.3636 • 2880 Plymouth Drive • Oakville, ON L6H 5R4 • Email: hflowcanada@hayward.com
Visit us at: haywardflowcontrol.com

230-480/3 ON/OFF 3-PHASE

HRCK/CB3A~4D

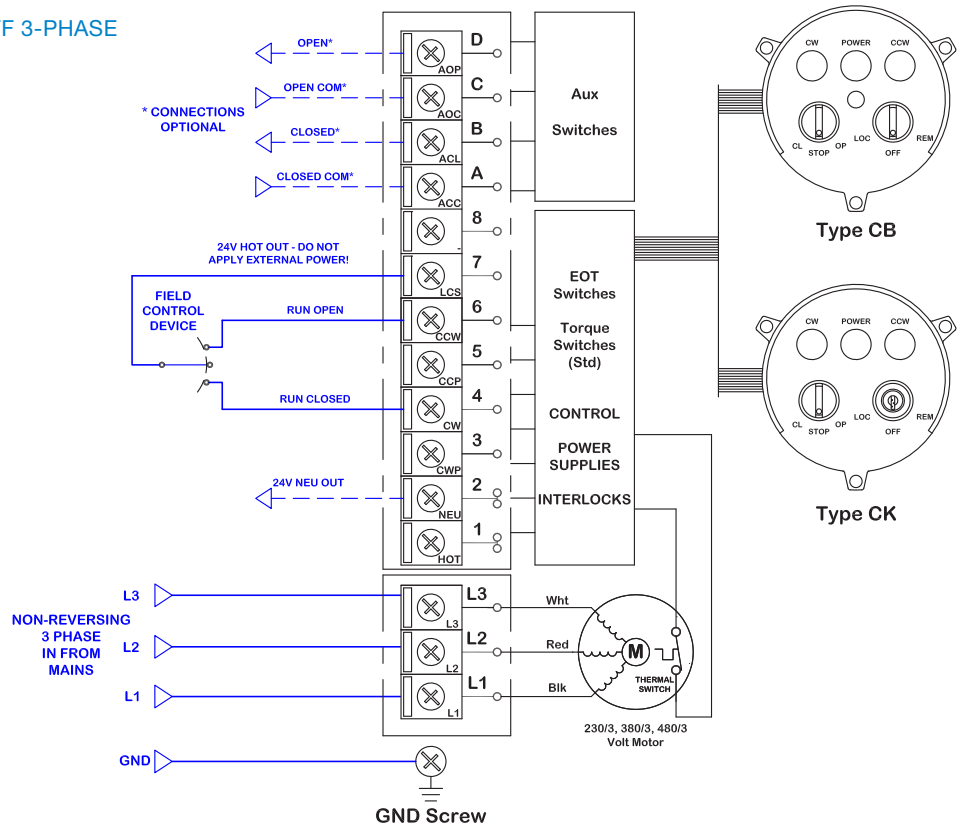

230-480/3 MOD 3-PHASE

HRCK/CB3A~4D

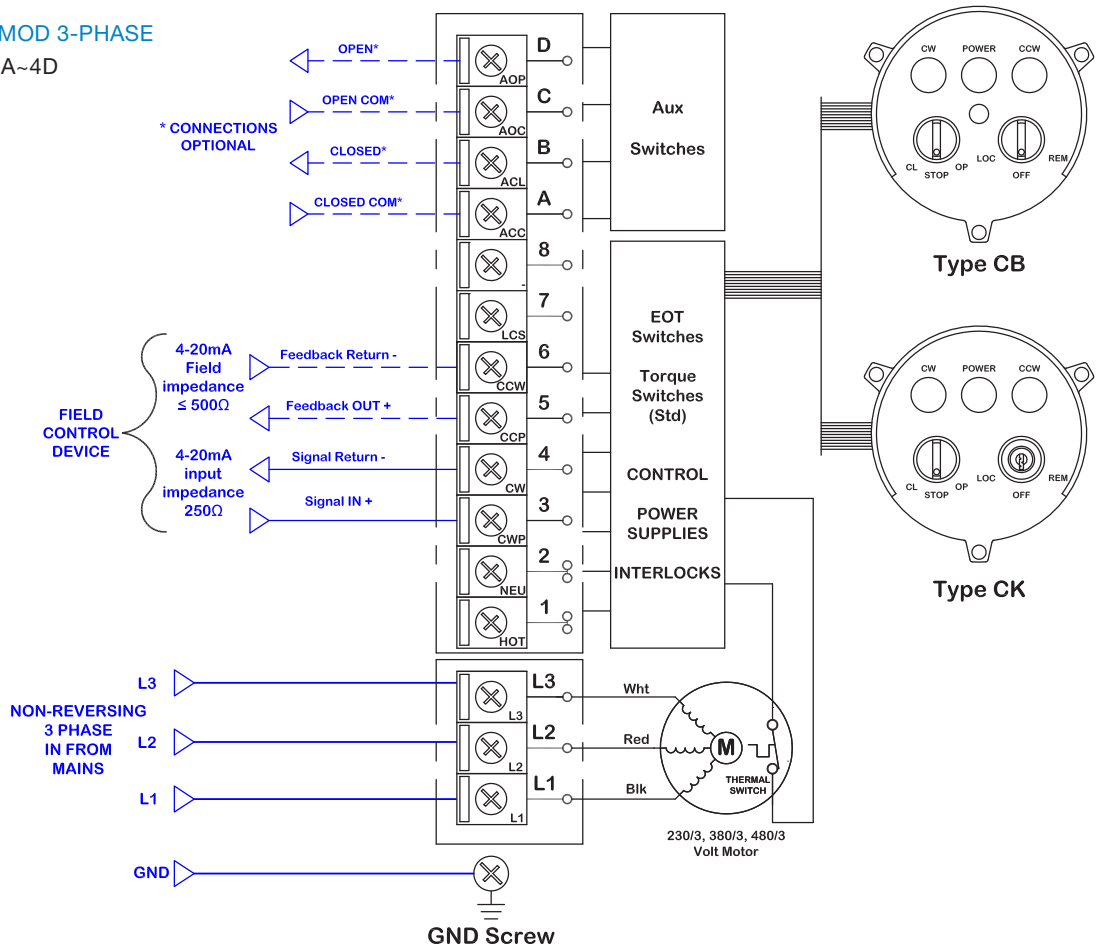

24VAC/VDC ON/OFF

HRCL/CD3A~4D

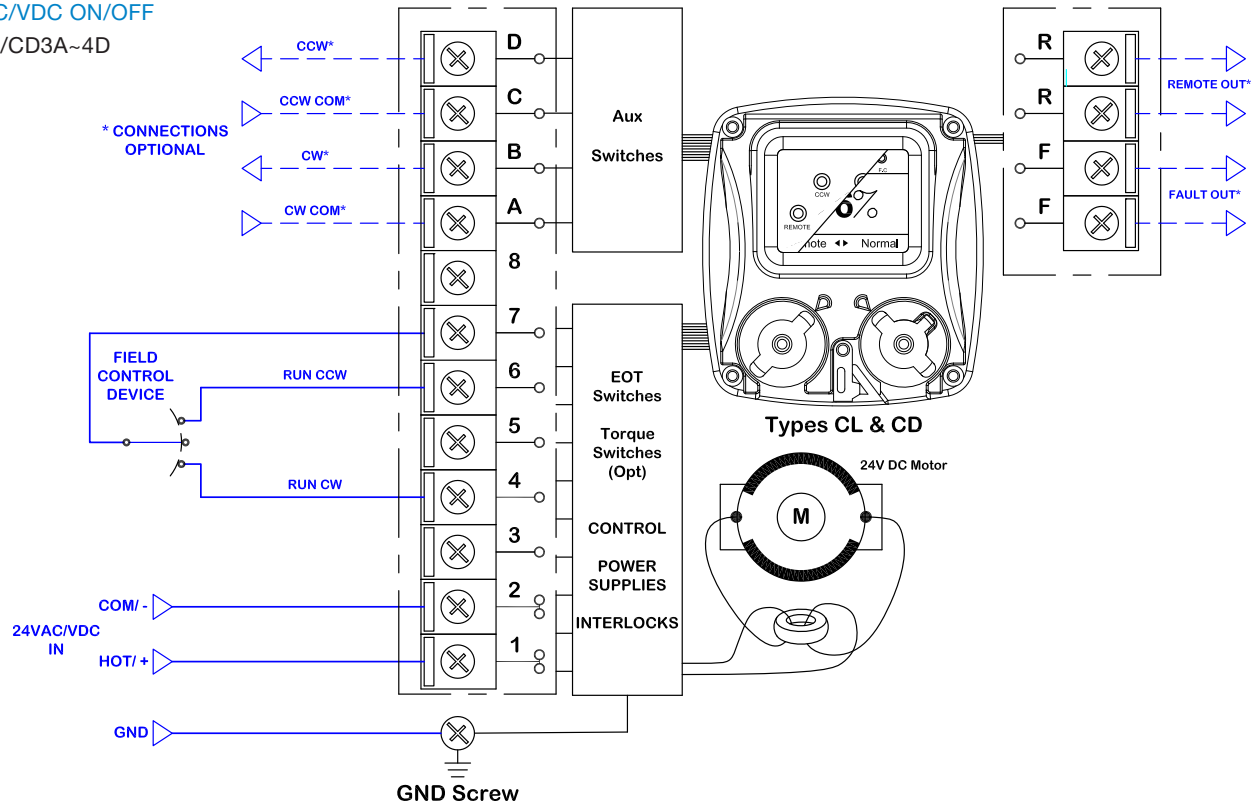

120/230VAC ON/OFF

HRCL/CD3A~4D

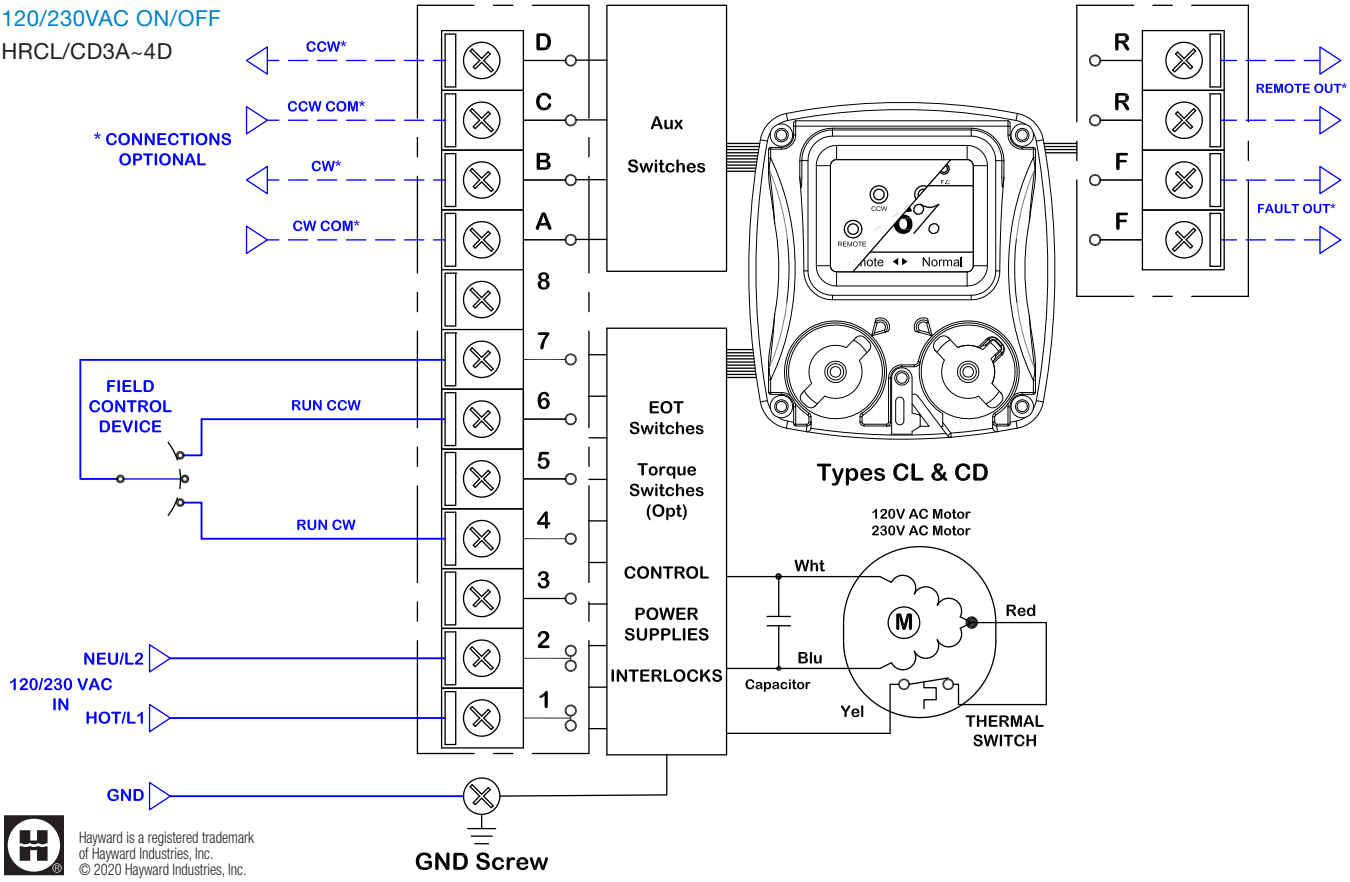

Hayward is a registered trademark of Hayward Industries, Inc.
© 2020 Hayward Industries, Inc.

USA: 1.888.429.4635 • Fax: 1.888.778.8410 • One Hayward Industrial Drive • Clemmons, NC 27012 • Email: hfcsales@hayward.com
Canada: 1.888.238.7665 • Fax: 1.905.829.3636 • 2880 Plymouth Drive • Oakville, ON L6H 5R4 • Email: hflowcanada@hayward.com
Visit us at: haywardflowcontrol.com

24VAC/VDC MOD

HRCL/CD3A~4D

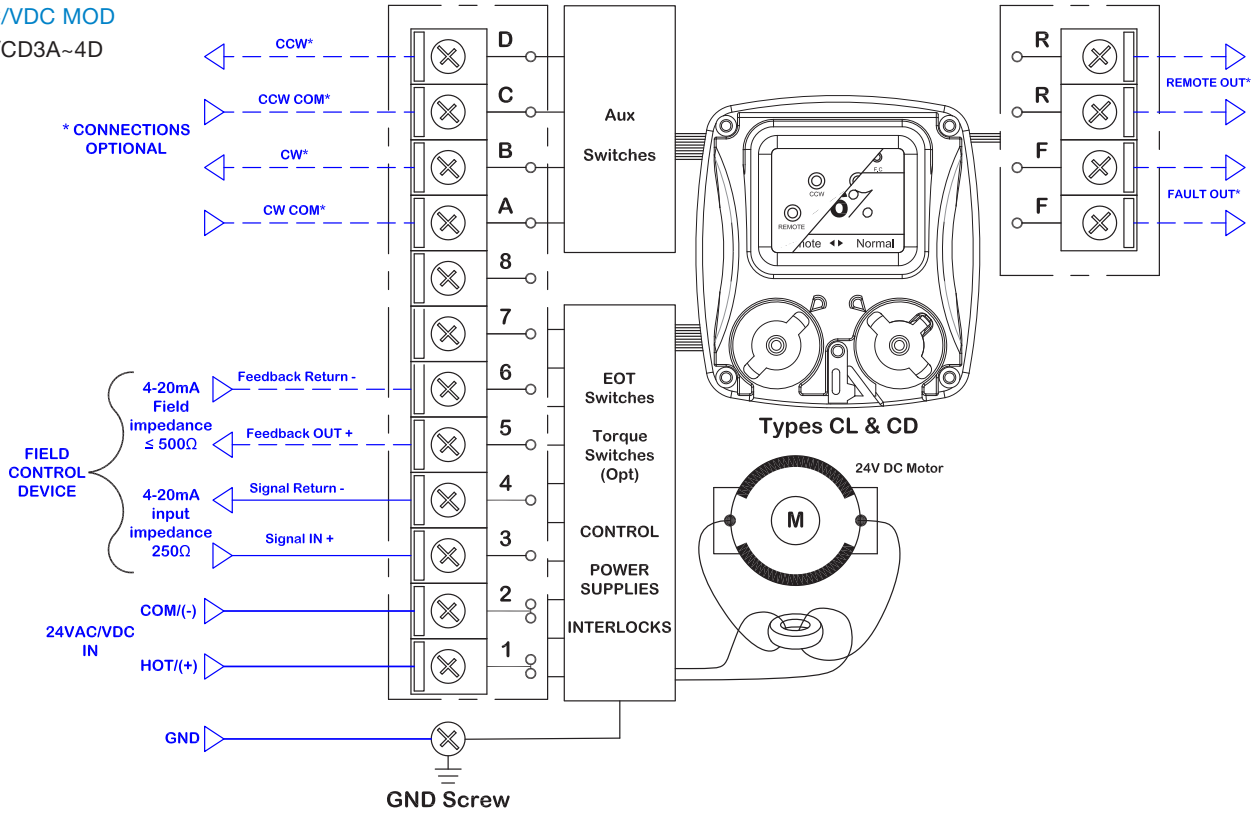

120/230VAC MOD

HRCL/CD3A~4D

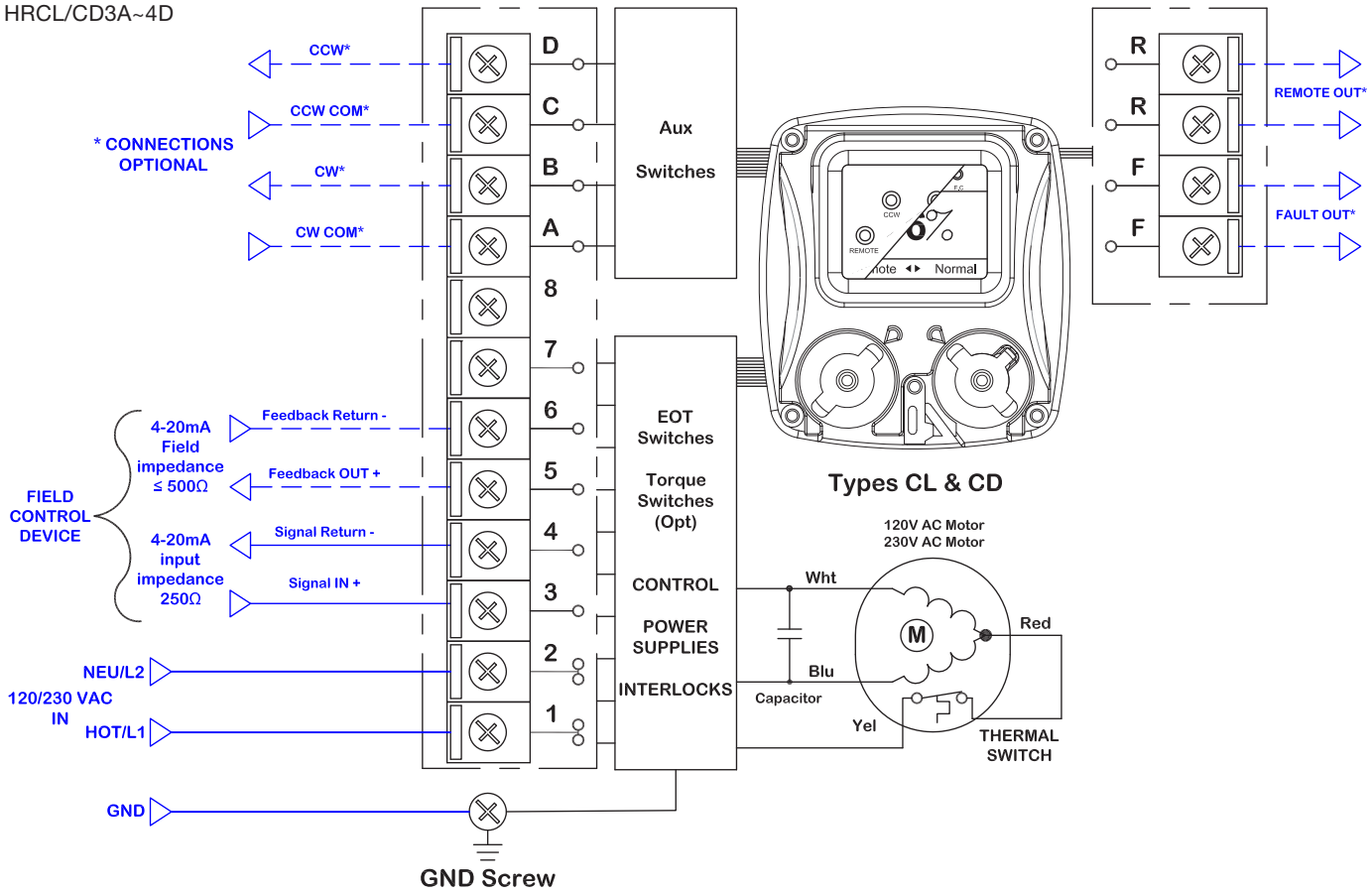

230-480/3 ON/OFF 3-PHASE

HRCL/CD3A~4D

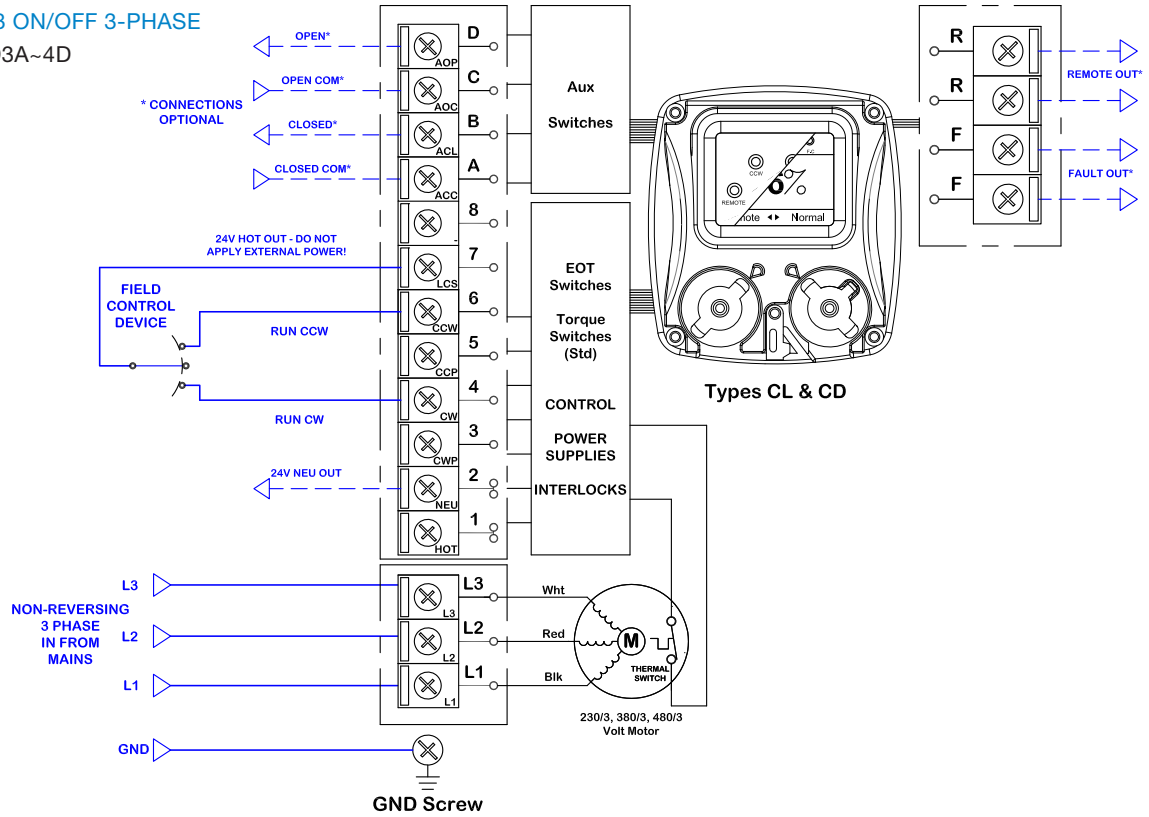

230-480/3 MOD 3-PHASE

HRCL/CD3A~4D

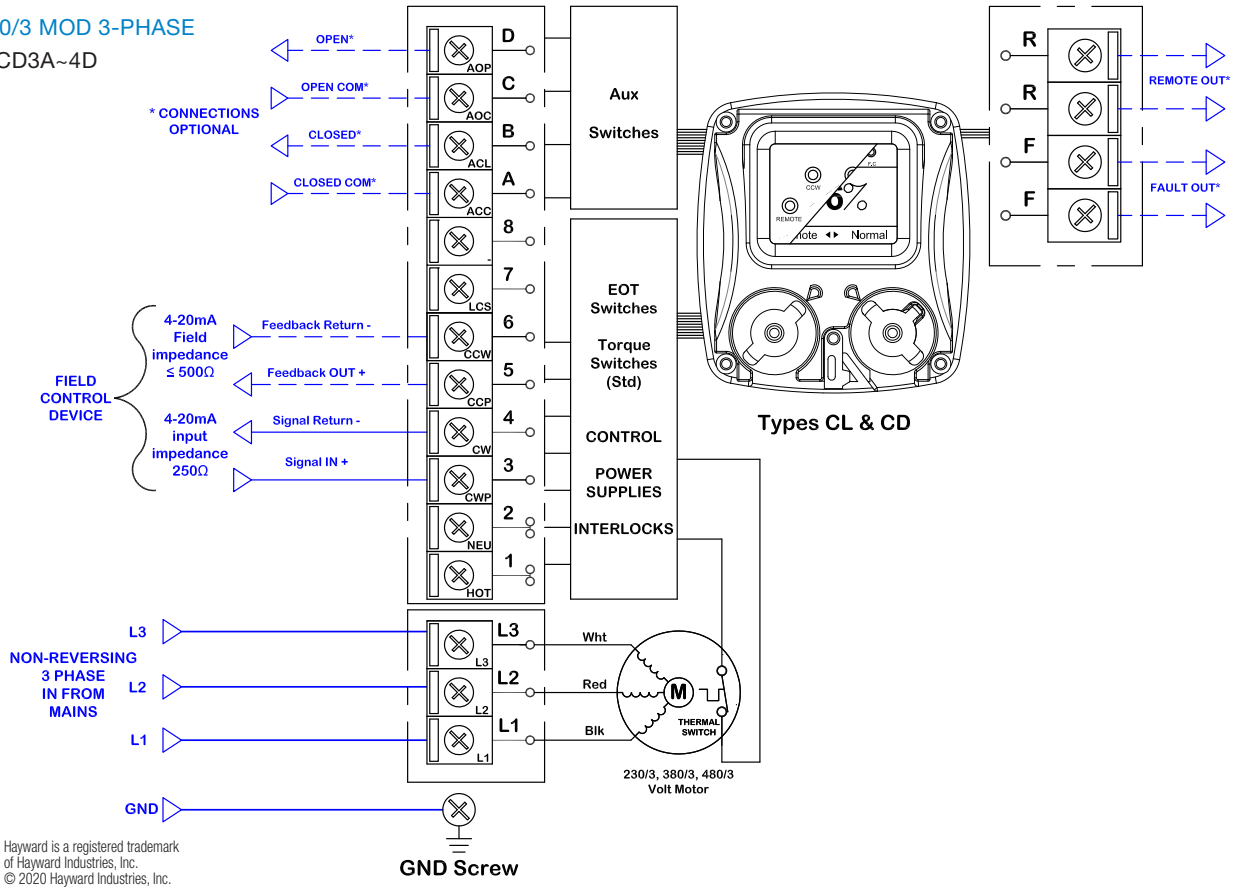

Hayward is a registered trademark of Hayward Industries, Inc.
© 2020 Hayward Industries, Inc.

USA: 1.888.429.4635 • Fax: 1.888.778.8410 • One Hayward Industrial Drive • Clemmons, NC 27012 • Email: hfcsales@hayward.com
Canada: 1.888.238.7665 • Fax: 1.905.829.3636 • 2880 Plymouth Drive • Oakville, ON L6H 5R4 • Email: hflowcanada@hayward.com
Visit us at: haywardflowcontrol.com

24 VAC/VDC ON/OFF BATTERY BACK-UP

HRSN2

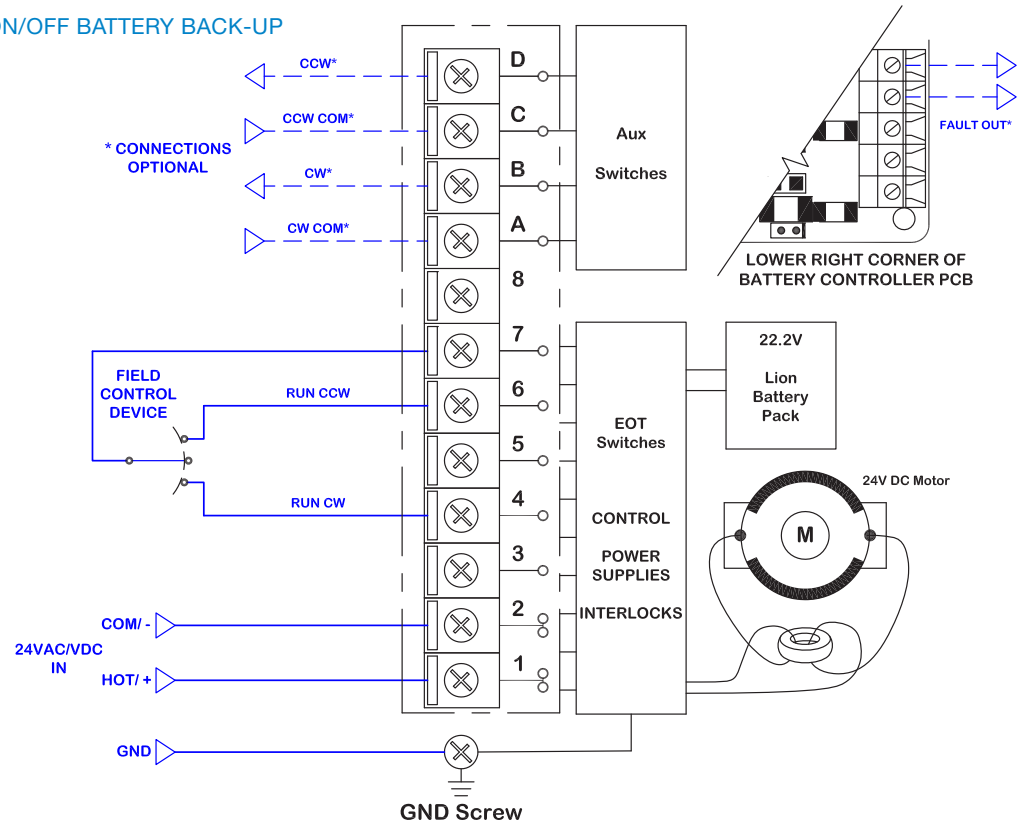

24 VAC/VDC MOD BATTERY BACK-UP

HRSN2

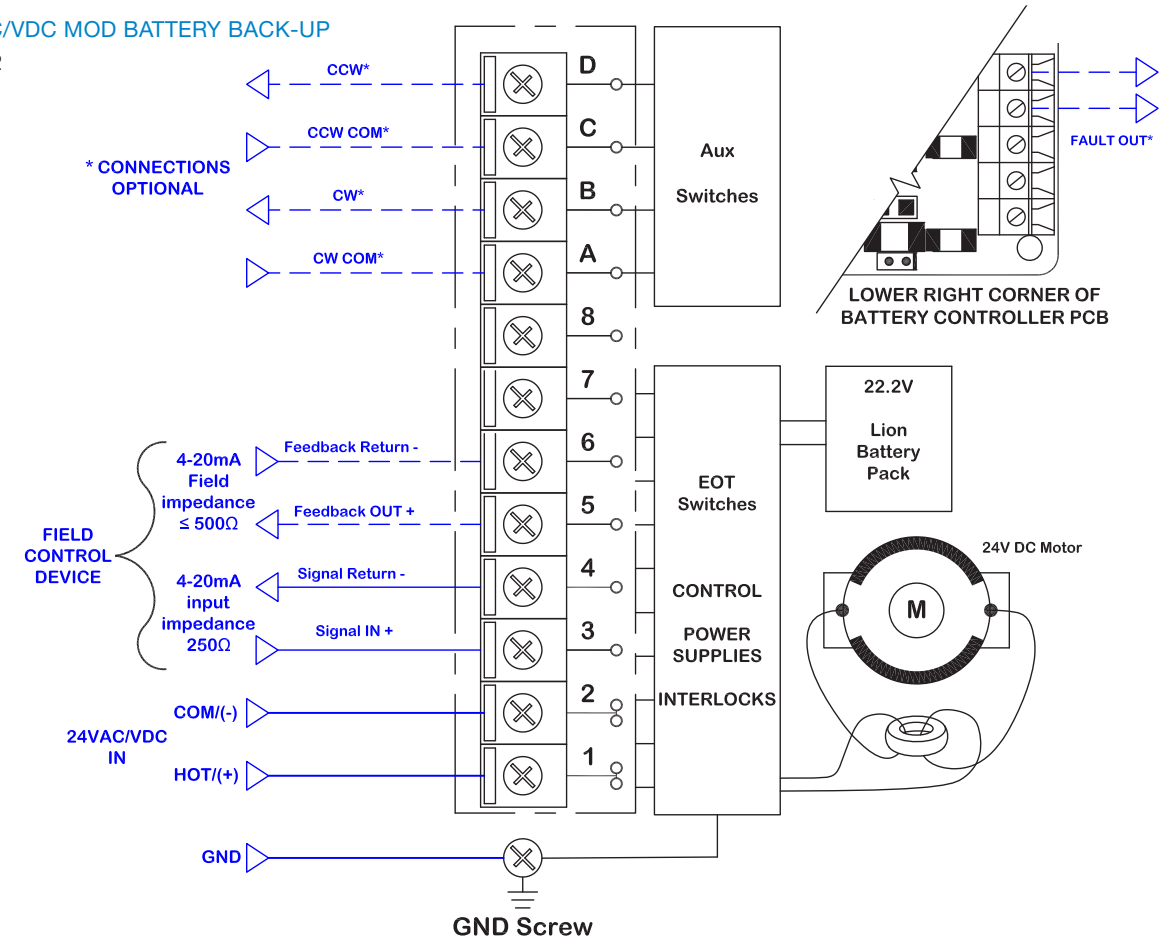

24 VAC/VDC ON/OFF

HRSN3A~4D

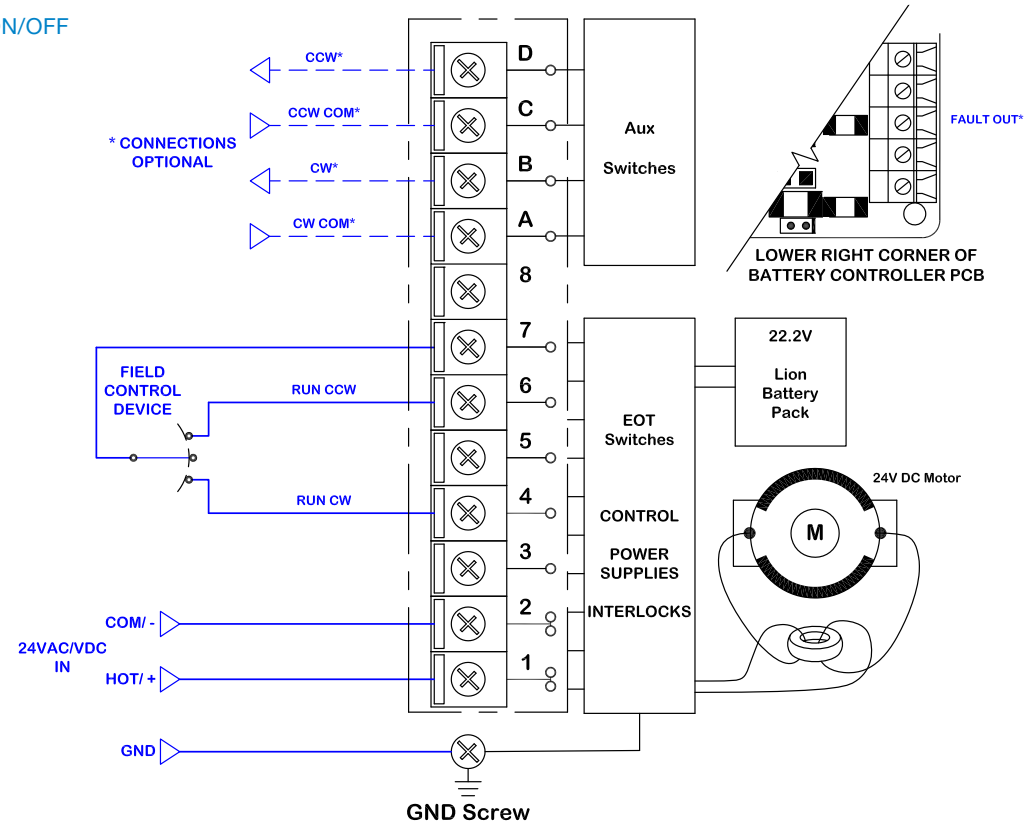

24 VAC/VDC MOD BATTERY BACK-UP

HRSN3A~4D

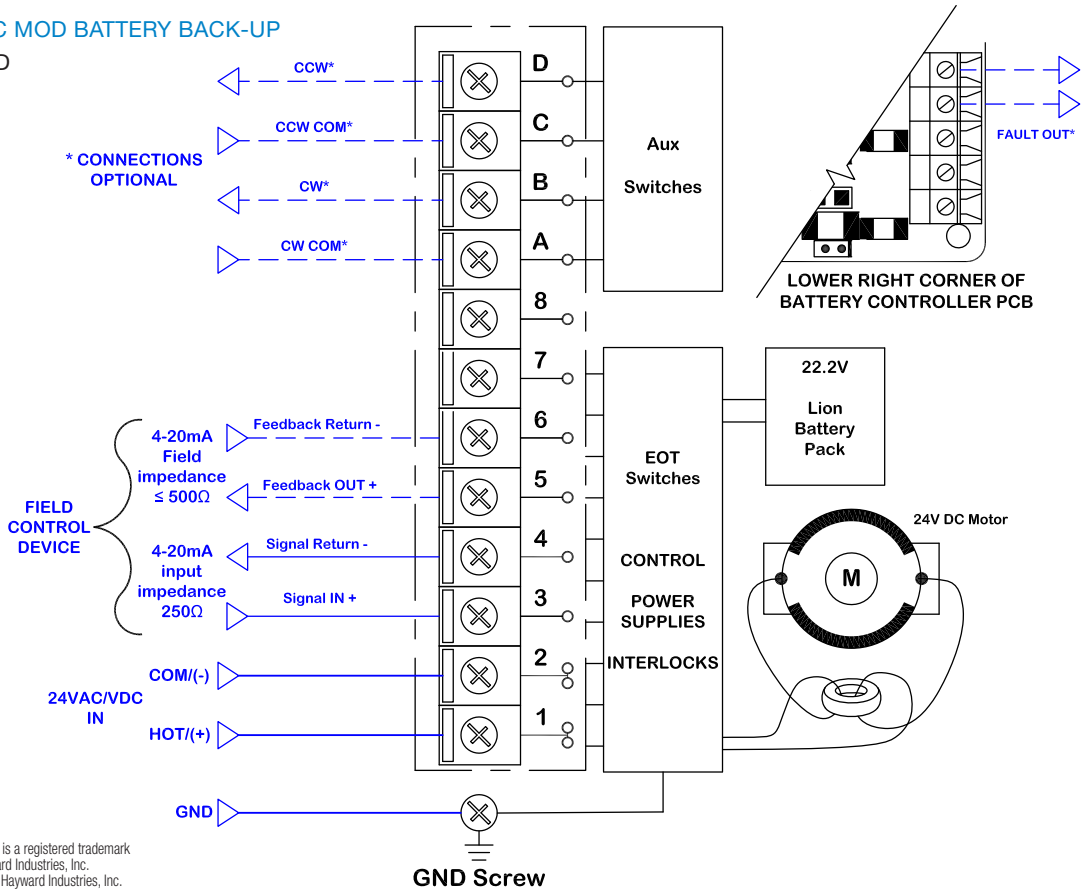

Hayward is a registered trademark of Hayward Industries, Inc.
© 2020 Hayward Industries, Inc.

USA: 1.888.429.4635 • Fax: 1.888.778.8410 • One Hayward Industrial Drive • Clemmons, NC 27012 • Email: hfcsales@hayward.com
Canada: 1.888.238.7665 • Fax: 1.905.829.3636 • 2880 Plymouth Drive • Oakville, ON L6H 5R4 • Email: hflowcanada@hayward.com
Visit us at: haywardflowcontrol.com

Hayward® Flow Control Automated Valve Questionnaire

VALVE TYPE

- ☐ Ball Valve
- ☐ Butterfly Valve
- ☐ Diaphragm Valve
- ☐ Three-Way Valve, Ball Configuration *(NT, TW or TP)*
- ☐ Lateral Three-Way Valve, Ball Configuration *(NT or 90)*

VALVE MATERIAL

- ☐ PVC ☐ GFPP
- ☐ CPVC
- ☐ PP
- ☐ PVDF

O-RING MATERIAL

- ☐ EPDM
- ☐ FPM

CONNECTION

- ☐ Socket
- ☐ Threaded
- ☐ Flanged
- ☐ Lugged Flange *(BY valves only)*

ELECTRIC ACTUATOR

Voltage _____ AC or DC

Options
- ☐ Timer Board
- ☐ Positioner *(4-20 mA)*
- ☐ Feedback Potentiometer
- ☐ Handwheel
- ☐ Battery Backup
- ☐ Auxiliary Limit Switches
- ☐ Heater/Thermostat
- ☐ Explosion-Proof Housing
- ☐ I.D. Tag

VALVE SIZE

_____

DISC MATERIAL *(BY VALVE ONLY)*

- ☐ PVC
- ☐ CPVC
- ☐ PP
- ☐ PVDF

DIAPHRAGM MATERIAL *(DAB VALVES ONLY)*

- ☐ EPDM
- ☐ EPM
- ☐ PTFE

VALVE OPERATION

- ☐ On/Off ☐ 3 Position - HRS Series Only
- ☐ Throttling *(modulating, 4-20 mA)*

INSTALLATION

- ☐ Indoors
- ☐ Outdoors *(for outdoors, use electric actuator with heater)*

PNEUMATIC ACTUATOR *(80 PSI)*

- ☐ Double-Acting
- ☐ Spring Return

Options
- ☐ Solenoid *(AC or DC)*
- ☐ Air Filter/Regulator
- ☐ Positioner *(4-20 mA)*
- ☐ Auxiliary Limit Switches
- ☐ I.D. Tag
- ☐ Declutchable Manual Override
- ☐ Municipal Visual Indicators
- ☐ Industrial Visual Indicators

Notes:

Hayward is a registered trademark
of Hayward Industries, Inc.
© 2020 Hayward Industries, Inc.

USA: 1.888.429.4635 • Fax: 1.888.778.8410 • One Hayward Industrial Drive • Clemmons, NC 27012 • Email: hfcsales@hayward.com
Canada: 1.888.238.7665 • Fax: 1.905.829.3636 • 2880 Plymouth Drive • Oakville, ON L6H 5R4 • Email: hflowcanada@hayward.com
Visit us at: haywardflowcontrol.com

HRS SERIES ACTUATOR SELECTOR

Model Torque In/lbs	HRSN2A HRSN2B 310	HRSN2R HRSN2S 440	HRSN3A 880	HRSN3B 1770	HRSN4A 3540	HRSN4B 5310	HRSN4C 7080	HRSN4D 8850	HRSN4E 15040	HRSN4F 20350	HRSN5A 30970
ISO*	F05/F07	F05/F07	F07/F10	F07/F10	F10/F12	F10/F12	F10/F12	F10/F12	F14	F14	F16
BALL	TBH & CVH SERIES										
1/2"	■	■									
3/4"	■	■									
1"	■	■									
1-1/4"	■	■									
1-1/2"	■	■									
2"	■	■									
2-1/2"	■	■									
3"	■	■									
4"	■	■									
6"	■	■									
THREEWAY	TN & HCLA...90 SERIES										
1/2"	■	■									
3/4"	■	■									
1"	■	■									
1-1/4"	■	■									
1-1/2"	■	■									
2"	■	■									
2-1/2"	■	■									
3"	■	■									
4"	■	■									
6"	■	■									
BUTTERFLY	BYV SERIES										
2"	■	■									
2-1/2"	■	■									
3"	■	■									
4"		■	■								
6"			■	■							
8"				■	■						
10"					■						
12"					■	■	■				
BUTTERFLY	BYB SERIES										
14"								■			
16"									■		
18"									■		
20"										■	
24"											■
PAGE	7-12	7-12	13-20	13-20	21-28	21-28	21-28	21-28	29-30	29-30	31-32

*Standard ISO5211 pattern. More available.

COMPACT & THERMOPLASTIC ELECTRIC ACTUATOR SELECTOR

Model Torque In/lbs	EAU28 120	EAU129 120	HZSN1CH1 266	HZSN1CH8 266	ECP3 359	ECP5 530	ECP8 796
ISO*	F05	F05	F03/F04/F05	F03/F04/F05	F03/F04/F05	F05/F07	F05/F07
BALL	TBH & CVH SERIES						
1/2"		■	■	■	■		
3/4"		■	■	■	■		
1"		■	■	■	■		
1-1/4"		■	■	■	■		
1-1/2"		■	■	■	■		
2"		■	■	■	■	■	
2-1/2"					■	■	
3"					■	■	
4"					■	■	■
6"					■	■	■
THREEWAY	TN & HCLA...90 SERIES						
1/2"	■		■	■	■		
3/4"	■		■	■	■		
1"	■		■	■	■		
1-1/4"	■		■	■	■		
1-1/2"	■		■	■	■		
2"	■		■	■	■	■	
2-1/2"					■	■	
3"					■	■	
4"					■	■	■
6"					■	■	■
BUTTERFLY	BYV SERIES						
2"					■		
2-1/2"					■		
3"					■		
4"						■	
6"							■
8"							
10"							
12"							
BUTTERFLY	BYB SERIES						
14"							
16"							
18"							
20"							
24"							
PAGE	45-46	47-48	41-42	41-42	43-44	43-44	43-44

*Standard IOS5211 pattern. More available.

Hayward is a registered trademark of Hayward Industries, Inc.
© 2020 Hayward Industries, Inc.

USA: 1.888.429.4635 • Fax: 1.888.778.8410 • One Hayward Industrial Drive • Clemmons, NC 27012 • Email: hfcsales@hayward.com
Canada: 1.888.238.7665 • Fax: 1.905.829.3636 • 2880 Plymouth Drive • Oakville, ON L6H 5R4 • Email: hflowcanada@hayward.com
Visit us at: haywardflowcontrol.com

PC SERIES PNEUMATIC DOUBLE ACTING ACTUATOR SELECTOR

Model Torque In/lbs	PCD15 172	PCD20 311	PCD25 639	PCD35 1848	PCD45 3622	PCD60 8585	PCD75 15856
ISO*	F05	F05	F07	F10	F12	F14	F14
BALL	TBH & CVH SERIES						
1/2"	■						
3/4"	■						
1"	■						
1-1/4"	■						
1-1/2"	■						
2"	■						
2-1/2"		■					
3"		■					
4"		■					
6"		■					
THREEWAY	TN & HCLA...90 SERIES						
1/2"	■						
3/4"	■						
1"	■						
1-1/4"	■						
1-1/2"	■						
2"	■						
2-1/2"		■					
3"		■					
4"		■					
6"		■					
BUTTERFLY	BYV SERIES						
2"		■					
2-1/2"		■					
3"		■					
4"			■				
6"			■				
8"				■			
10"					■		
12"					■		
BUTTERFLY	BYB SERIES						
14"						■	
16"							■
18"							■
20"							
24"							
PAGE	61-62	61-62	61-62	61-62	61-62	61-62	61-62

*Standard ISO5211 pattern. More available.

PC SERIES PNEUMATIC AIR TO SPRING FAIL-SAFE ACTUATOR SELECTOR

Model Torque In/lbs	PCS15 61	PCS20 109	PCS25 217	PCS30 345	PCS35 607	PCS45 1218	PCS60 2857
ISO*	F05	F05	F07	F07	F10	F12	F14
BALL	TBH & CVH SERIES						
1/2"	■						
3/4"	■						
1"	■						
1-1/4"		■					
1-1/2"		■					
2"		■					
2-1/2"			■				
3"			■				
4"			■				
6"			■				
THREEWAY	TN & HCLA...90 SERIES						
1/2"	■						
3/4"	■						
1"	■						
1-1/4"		■					
1-1/2"		■					
2"		■					
2-1/2"			■				
3"				■			
4"				■			
6"				■			
BUTTERFLY	BYV SERIES						
2"			■				
2-1/2"			■				
3"			■				
4"				■			
6"					■		
8"						■	
10"							■
12"							
BUTTERFLY	BYB SERIES						
14"							
16"							
18"							
20"							
24"							
PAGE	63-64	63-64	63-64	63-64	63-64	63-64	63-64

*Standard ISO5211 pattern. More available.

Hayward is a registered trademark
of Hayward Industries, Inc.
© 2020 Hayward Industries, Inc.

USA: 1.888.429.4635 • Fax: 1.888.778.8410 • One Hayward Industrial Drive • Clemmons, NC 27012 • Email: hfcsales@hayward.com
Canada: 1.888.238.7665 • Fax: 1.905.829.3636 • 2880 Plymouth Drive • Oakville, ON L6H 5R4 • Email: hflowcanada@hayward.com
Visit us at: haywardflowcontrol.com

PNEUMATIC DOUBLE ACTING ACTUATOR SELECTOR

Model	PMD15	PMD415	PMD419	PMS604	PMD612	PMD614	PMD616	PMD621	PMD626	PMD636	PMD641	PMD646	PMD651	PMD661	PMD667	PMD671
Torque In/lbs	275	275	500	80	125	207	275	500	750	1600	2000	3125	4500	9100	12000	23500
ISO*	F05	F05	F07	F03	F03/F05	F03/F05	F04/F07	F05/F07	F05/F07	F07/F10	F07/F10	F07/F10	F10/F12	F10/F14	F10/F14	F14/F16
BALL	TBH & CVH SERIES															
1/2"	■	■		■	■	■										
3/4"	■	■		■	■	■										
1"	■	■		■	■	■										
1-1/4"	■	■			■	■										
1-1/2"	■	■			■	■										
2"	■	■			■	■										
2-1/2"			■			■										
3"			■			■										
4"			■				■									
6"			■				■									
THREEWAY	TN & HCLA...90 SERIES															
1/2"	■	■		■	■	■										
3/4"	■	■		■	■	■										
1"	■	■		■	■	■										
1-1/4"	■	■			■	■										
1-1/2"	■	■			■	■										
2"	■	■			■	■										
2-1/2"			■			■										
3"			■			■										
4"			■				■									
6"			■				■									
BUTTERFLY	BYV SERIES															
2"	■	■	■		■	■	■									
2-1/2"	■	■	■				■									
3"	■	■	■				■	■								
4"			■					■	■							
6"									■	■						
8"										■	■	■				
10"												■	■			
12"													■			
BUTTERFLY	BYB SERIES															
14"														■	■	
16"															■	■
18"																■
20"																■
24"																■
PAGE	49-50	53-54	53-54	57-58	57-58	57-58	57-58	57-58	57-58	57-58	57-58	57-58	57-58	57-58	57-58	57-58

*Standard ISO5211 pattern. More available.

PM SERIES PNEUMATIC AIR TO SPRING FAIL-SAFE ACTUATOR SELECTOR

Model	PMS15	PMS415	PMS420	PMS614	PMS616	PMS621	PMS626	PMS631	PMS636	PMS641	PMS651	PMS661	PMS671	PMS676
Torque In/lbs	107	107	230	77	107	193	260	373	571	737	1749	3734	8637	11598
ISO*	F05	F05	F07	F03/F05	F04/F07	F05/F07	F05/F07	F05/F07	F07/F10	F07/F10	F10/F12	F10/F14	F14/F16	F16
BALL	TBH & CVH SERIES													
1/2"	■	■		■	■									
3/4"	■	■		■	■									
1"	■	■			■									
1-1/4"	■	■			■									
1-1/2"	■	■			■									
2"	■	■			■	■								
2-1/2"			■			■								
3"			■			■	■							
4"			■				■							
6"			■				■	■						
THREEWAY	TN & HCLA...90 SERIES													
1/2"	■	■		■	■									
3/4"	■	■		■	■									
1"	■	■		■	■									
1-1/4"	■	■			■									
1-1/2"	■	■			■									
2"	■	■			■	■								
2-1/2"			■			■								
3"			■			■	■							
4"			■				■							
6"			■				■	■						
BUTTERFLY	BYV SERIES													
2"			■		■	■	■							
2-1/2"							■							
3"							■	■	■					
4"									■					
6"									■	■	■			
8"											■			
10"												■		
12"												■		
BUTTERFLY	BYB SERIES													
14"													■	
16"														■
18"														
20"														
24"														
PAGE	51-52	55-56	55-56	59-60	59-60	59-60	59-60	59-60	59-60	59-60	59-60	59-60	59-60	59-60

*Standard ISO5211 pattern. More available.

Hayward is a registered trademark of Hayward Industries, Inc.
© 2020 Hayward Industries, Inc.

USA: 1.888.429.4635 • Fax: 1.888.778.8410 • One Hayward Industrial Drive • Clemmons, NC 27012 • Email: hfcsales@hayward.com
Canada: 1.888.238.7665 • Fax: 1.905.829.3636 • 2880 Plymouth Drive • Oakville, ON L6H 5R4 • Email: hflowcanada@hayward.com
Visit us at: haywardflowcontrol.com

Glossary of Actuation Terms

AUTOMATIC RESET
(Electric) A component of the thermal overload device that permits it to automatically engage when the temperature falls to an acceptable level.

AMPERAGE RATING AUXILIARY LIMIT SWITCH
The maximum current carrying capacity of the extra limit switches contained within the actuator housing.

CONDUIT ENTRY, SIZE NPT
The electrical entrance into the housing of the actuator through which the operating wires are connected. The exterior of the entrance hole is usually tapped with an NPT thread (National Pipe Thread).

CONSTANT TORQUE OUTPUT
(Pneumatic) The torque in inch pounds developed by a double acting pneumatic rack and pinion or vane type actuator as measured at the beginning and end of a stroke or at any point in between.

CYCLE TIME
The time required for an actuator to rotate one complete cycle (typically 90° or 180°), expressed in seconds.

DESIGN TYPE
The basic design type of the actuator in terms of the method used to deliver rotational torque to the output shaft.

DIRECT MOUNTING
A method used to attach a valve to an actuator, being coupled without the use of separate bracketry or special mounting hardware.

DISCRETE MOUNTING BRACKET
A method used to attach a valve to an actuator, being a separate part from either the valve, actuator or both.

DPDT
Double Pole, Double Throw.

DUTY CYCLE
(Electric) The ratio of actual motor run time as compared to 100%. (Example: an actuator with a 20% duty cycle, having a required run time of 5 seconds to rotate 90°, would require an off time of 25 seconds before it can be cycled another 90°).

EMF
Electro-Magnetic Force.

ENCLOSURE MATERIALS (TOP AND BOTTOM)
Material of construction of the actuator base (bottom) and cover (top).

END OF STROKE TRAVEL STOPS (ADJUSTABLE)
A mechanical component on the actuator that can be adjusted to position the valve either open or closed.

EXTERIOR FINISH
The exterior coating or finish used to protect the actuator housing from corrosion.

EXTERNAL HARDWARE
The materials of construction of the fasteners and/or other hardware used to assemble the actuator components.

FEMALE OUTPUT SHAFT
The output drive of the actuator having a recessed opening into which the valve stem or coupling shaft fits.

HIGH AMBIENT LIMIT
The maximum operating temperature of the actuator, as designated by the actuator manufacturer.

HYSTERESIS
The cumulative rotational twist resulting from the “take-up” of clearances between the fitting dimensions of the ball, stem, coupling and actuator mechanism.

INTEGRAL MOUNTING BRACKET
A method used to attach a valve to an actuator, being a part of either the valve, actuator or both.

INTERNAL AIR PORTING
The high pressure (100 PSI) air passages contained within the actuator that shuttle the air pressure to either side of the torque producing components.

LOW AMBIENT LIMIT (°F)
The minimum operating temperature of the actuator as set by the actuator’s manufacturer, expressed in degrees Fahrenheit.

LOW AMBIENT LIMIT W/OUT “T” (HEATER AND THERMOSTAT)
The minimum operating temperature of the actuator, as designated by the actuator manufacturer without the use of a heater and thermostat.

MALE OUTPUT SHAFT
The output drive of the actuator consisting of an externally protruding shaft.

MANUAL OVERRIDE, (DE-CLUTCHING)
(Electric) An actuator component that allows mechanical turning of the valve, while simultaneously disengaging the gear train.

MANUAL OVERRIDE
An actuator component that allows mechanical turning of the valve.

Glossary of Actuation Terms, *CONTINUED*

MAXIMUM OPERATING PRESSURE (PSI)
(Pneumatic) The pressure limitation established as the maximum safe operating pressure.

MOTOR BRAKE/MECHANICAL BRAKE (STANDARD ON BUTTERFLY VALVES)
(Electric) A mechanical device that is designed to apply a force to a motor shaft to prevent back drive of the actuator geartrain resulting from hydraulic pressure transfer of the process fluid through the valve.

MIN / MAX WIRE SIZE
The minimum and maximum wire size that the actuator requires or that will fit into the actuator's terminal connections.

MODULATING SERVICE
The ability of the actuator to be used in systems that require continuous control, typically with a positioner.

MOTOR DRIVE ROTATION
(Electric) The rotation of the actuator output shaft in either one direction (uni-directional) or two directions (reversing).

MOTOR SWITCHES (SPDT)
(Electric) The switches that control the motor's starting and stopping. (SPDT means Single Pole Double Throw).

MOTOR THERMAL PROTECTOR
(Electric) A device that protects the motor against overheating and subsequent burn-out due to (typically a 120 VAC 25% duty cycle motor is protected at 100°C) heat buildup resulting from excessive starting, stopping or continuous running.

MOUNTING POSITION
The ability of the valve/actuator to be physically mounted in the piping system.

NEMA RATING (AVAILABLE)
1, 4, 4X, 7, 9 National Electrical Manufacturers Association Rating.

NUMBER OF PISTONS
(Pneumatic) The number of torque producing surfaces within the actuator.

PERMANENT LUBRICATION
A type of lubrication sealed within the actuator to prolong cycle life.

PISTON SEALING MATERIAL
(Pneumatic) The type of elastomer used to maintain an airtight seal between the piston and the cylinder.

POSITION INDICATOR WITH LED
Light emitting diodes which, when illuminated, indicate visual confirmation of the valve's position in terms of open or closed.

POSITION INDICATOR
A mechanical or electrical device that allows visual confirmation of the valve's position in terms of open or closed (e.g., Red = "closed" or Green = "open").

PREWIRED TO TERMINAL STRIP
Internal component wire leads or printed circuit board connector pins which terminate at a terminal strip to which field wiring can be attached.

REVERSING
The output shaft of the actuator rotates in both CW and CCW directions.

SELF-LOCKING GEAR TRAIN
(Electric) Design of an actuator gear train that locks the actuator output shaft, thus preventing valve rotation.

SPDT
Single Pole, Double Throw.

SPRING CONFIGURATION (QTY/TYPE)
(Pneumatic) The quantity and design configuration of the springs used within a pneumatic actuator that affect the spring return (fail-safe) function.

STANDARD VOLTAGE (AC)
Unless otherwise specified, the voltage of all electrical devices in this catalog will be considered to be 115 / 120 VAC/60 Hz. All ratings, performance or specifications are based on standard voltage.

START/FINISH TORQUE
(Pneumatic) The torque in inch pounds, as measured at the actuator output shaft of a pneumatic actuator containing a spring return feature. The torque developed at the beginning of the stroke when the spring is fully compressed (START) and the torque at the end of the stroke (FINISH) when the spring has dissipated its stored energy.

START/STALL TORQUE:
(Electric) The torque in inch pounds, as measured at the actuator output shaft at the instant of the start of rotation, and at maximum stall when the motor is restricted from rotation while energized.

TWO STAGE SHUT-OFF (DRIBBLE CONTROL)
The closing of the valve in two, or more, distinct motions. The first movement, partially closing such that the remaining flow is small. The second movement, fully closing the valve.

UNI-DIRECTIONAL
The output shaft of the actuator rotates in only CW direction, as viewed from the top of the actuator.

UNIFORM BEARING LOAD DISTRIBUTION
The design of the torque producing components to be supported by bearing surfaces that allow high cycle life.

VOLTAGE VARIATIONS
The variations of optional voltages available for all products offered.

WARRANTY & RGA POLICY

1. **CLAIMS:** All claims must be made in writing and received by Hayward within 10 days after receipt of merchandise. If a shipment is received in a damaged condition, a claim must be filed with the delivering carrier and noted on the freight bill before you accept the merchandise.

2. **THREE YEAR WARRANTY:** All products manufactured by Hayward are warranted against defects in material or workmanship for a period of three years from date of shipment. Our sole obligation under this warranty is to repair or replace, at our option, any product or any part or parts thereof found to be defective. **HAYWARD MAKES NO OTHER REPRESENTATION OR WARRANTY, EXPRESS OR IMPLIED, INCLUDING, BUT NOT LIMITED TO, ANY IMPLIED WARRANTY OF MERCHANTABILITY OR FITNESS FOR A PARTICULAR PURPOSE.** The warranty set forth above is the only warranty applicable to Hayward products and in no event shall Hayward be liable for any delay, work stoppage, cartage, shipping, loss of use of equipment, loss of time, inconvenience, loss of profits of any direct or indirect incidental resulting from or attributable to a breach of warranty. **The remedies under this warranty shall be the only remedies available. OUR MAXIMUM LIABILITY SHALL NOT IN ANYEVENT EXCEED THE CONTRACT PRICE FOR THE PRODUCT.**

3. **RETURNS OF GOODS FOR NON-WARRANTY CLAIM:** Hayward Flow Control will authorize the return of products purchased within the last twelve (12) months in original “like new” packaging of current design, and listed in the current Complete Price Book. All returns must be accompanied by a “Return Goods Authorization” number, which must be obtained from Hayward Flow Control prior to shipment. All returns are subject to inspection upon receipt. No credit will be issued until the returned material has been inspected, accepted and processed. Customers will be contacted if quantity differences and/or non-acceptable material are found during inspection. Credit will reflect only quantities actually received and accepted. Disposition of product(s) not accepted by Hayward Flow Control must be provided by Distributor within 10 business days; otherwise, it will be subject to disposal. Minimum restock charge is $50.00. All material returns must be received within thirty (30) days of the RGA issuance and shipped freight prepaid. No collect shipments will be accepted. Prepaid freight does not apply to returns due to Hayward Flow Control order entry or shipping errors. Hayward Flow Control will authorize the return of product considered a stock item with a minimum restock charge of 25%. Hayward Flow Control will authorize the return of standard Pump or Actuated product with a minimum restock charge of 40%. Specialty products such as Strainer or Filtration assemblies and Engineered Products are non-cancelable/non-re-turnable. Restock charges do not apply to returns due to Hayward Flow Control order entry or shipping errors.

4. **RETURNS OF GOODS FOR WARRANTY CLAIM:** When requesting an RGA for product evaluation, the Customer must first complete and submit an In Service Form obtained from Hayward Flow Control Technical Services. Additionally, a Safety Data Sheet (SDS) must be submitted along with the In Service Form to Technical Services prior to receiving a Return Goods Authorization number. All Warranty Claim returns must be accompanied by the SDS, In Service Form and RGA number. Product must be washed and free of service media prior to returning for evaluation. Failure to do so may result in denial of claim and product returned back freight collect. Customers will be contacted if quantity differences and/or non-acceptable material are found during inspection.The Customer will be notified of the evaluation results. If the Warranty Claim is accepted, credit will be issued or replacement product sent. Freight will be credited upon approval of claim. If the Warranty Claim is declined, disposition of product(s) must be provided to Technical Services within 30 business days; otherwise, it will be subject to disposal. Rejected product returned to the Customer will ship freight collect. All warranty claim returns must be received within thirty (30) days of the RGA issuance and shipped freight prepaid. No collect shipments will be accepted.

Notes:

Hayward is a registered trademark
of Hayward Industries, Inc.
© 2020 Hayward Industries, Inc.

USA: 1.888.429.4635 • Fax: 1.888.778.8410 • One Hayward Industrial Drive • Clemmons, NC 27012 • Email: hfcsales@hayward.com
Canada: 1.888.238.7665 • Fax: 1.905.829.3636 • 2880 Plymouth Drive • Oakville, ON L6H 5R4 • Email: hflowcanada@hayward.com
Visit us at: haywardflowcontrol.com

NSF/ANSI Standard 61 and NSF/ANSI 372

NSF/ANSI Standard 61 is a standard defining the requirements for products that are destined for use in drinking water systems. In summary, the standard requires immersion testing of all products that will come into contact with drinking water for any chemicals, compounds, elements, etc. that may leach into the water that passes through the product.

Hayward products that are NSF 61 certified can easily be found on the NSF website, www.NSF.org. Additionally, those products certified to NSF61-G are also certified to NSF/ANSI 372 and conforms with the lead content requirements for "lead free" plumbing as defined by California, Vermont, Maryland and Louisiana state laws and the U.S. Safe Drinking Water Act.

The following Hayward Flow Control products comply with this directive:

PRODUCT	SIZE	WATER CONTACT TEMP	WATER CONTACT MATERIAL
TBH SERIES BALL VALVES			
Hayward True Union Ball Valve (PVC)	**1/4" - 2"**	**CLD23**	MLTPL
Hayward True Union Ball Valve (CPVC)	**1/4" - 2"**	**CLD23**	MLTPL
CVH SERIES BALL VALVES			
CVH Series Ball Valve (CPVC)	**1/4" - 2"**	**CLD 23**	MLTPL
CVH Series Ball Valve (PVC)	**1/4" - 2"**	**CLD 23**	MLTPL
TB SERIES BALL VALVES			
Hayward True Union Ball Valve (PVC)	**1/4" - 4"**	**CLD23**	MLTPL
Hayward True Union Ball Valve (CPVC)	**1/4" - 4"**	**CLD23**	MLTPL
TC SERIES CHECK VALVES			
Hayward True Union Ball Check Valve (PVC)	**1/4" - 4"**	**CLD23**	MLTPL
Hayward True Union Ball Check Valve (CPVC)	**1/4" - 4"**	**CLD23**	MLTPL
BYV SERIES BUTTERFLY VALVES			
Hayward Butterfly Valve (PVC/EPDM)	**2" - 12"**	**CLD23**	MLTPL
Hayward Butterfly Valve (CPVC/EPDM)	**4" - 12"**	**D. HOT**	MLTPL
BYCN SERIES BUTTERFLY VALVES (PVC/EPDM)*	**3" - 8"**	**CLD23**	MLTPL
SIMPLEX SB SERIES STRAINERS**			
Hayward Simplex Basket Strainer (PVC)	**1/2" - 8"**	**CLD23**	MLTPL
Hayward Simplex Basket Strainer (CPVC)	**1/2" - 8"**	**D. HOT**	MLTPL
BFA SERIES (PVC/EPDM) BULKHEAD	**1/2" - 6"**	**CLD23**	MLTPL
BFAS SERIES (PVC/EPDM) BULKHEAD	**1/2" - 3"**	**CLD23**	MLTPL
FLOW CONTROL VALVES			
Universal Stopcock™	**1/4"**	**CLD23**	MLTPL
RPV SERIES PRESSURE RELIEF VALVES	**1/2" - 4"*** **	**CLD23**	MLTPL
PBV SERIES BACK PRESSURE VALVES	**1/2" - 4"*** **	**CLD23**	MLTPL

* Certified for use in distribution systems only.
** Certified for use in water treatment plant applications only with a minimum daily flow rate of 3,120 gallons.
*** See listing for specific size and material combination.
NOTE: Unless otherwise indicated for Materials, Certification is only for the Water Contact Material shown in the Listing.

Always consult NSF Listing online as changes and updates may occur.

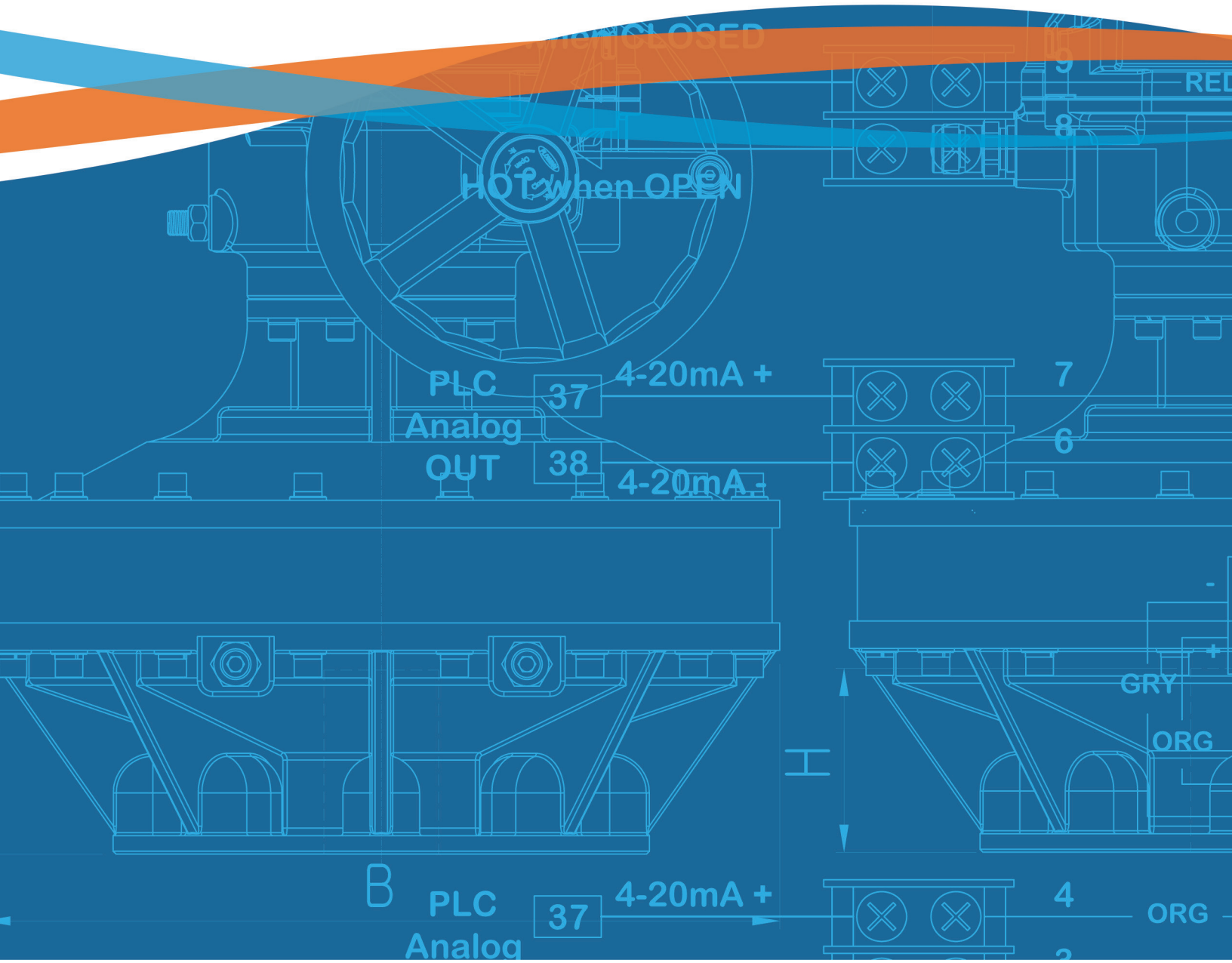

Hayward is a registered trademark
of Hayward Industries, Inc.
© 2020 Hayward Industries, Inc.

HACT0920

USA: 1.888.429.4635 • Fax: 1.888.778.8410 • One Hayward Industrial Drive • Clemmons, NC 27012 • Email: hfcsales@hayward.com
Canada: 1.888.238.7665 • Fax: 1.905.829.3636 • 2880 Plymouth Drive • Oakville, ON L6H 5R4 • Email: hflowcanada@hayward.com
Visit us at: haywardflowcontrol.com